ARX SLIDE

Made in Europe
ARX by KOVINOPLASTIKA LOŽ
LIFETIME WARRANTY

Made in Europe
ARX by KOVINOPLASTIKA LOŽ
ARX COAT SURFACE PROTECTION

ARX SLIDE

High quality, durable and simple
Sliding hardware for sliding doors and windows

2026

ARX PORTFOLIO

ARX SPIN

Turn and tilt hardware solutions for windows and balcony doors.

ARX SPIN

ARX DOOR LOCK

Multipoint door lock solutions for main and back entrance doors.

ARX DOOR LOCK

ift ZERTIFIZIERT CERTIFIED

IFT Rosenheim - Certificate of conformity for ARX SPIN and ARX DOOR LOCK.

ARX CASEMENT

Solutions for casement windows –outward opening.

ARX CASEMENT

ARX SLIDE

Sliding hardware solutions for doors and windows.

ARX SLIDE

ARX ACCESSORIES

High quality, durable and simple accessories for windows and doors.

ARX ACCESSORIES

Follow us: in

www.arx-hardware.com

ARX The Hardware.

03/2022

Kovinoplastika Lož d.o.o.,
Lož, Cesta 19. oktobra 57,
SI-1386 Stari trg pri Ložu
+ 386 (0)1 70 95 100
info@arx-hardware.com
www.arx-hardware.com

All the information in the following brochure has been carefully selected and verified. In the time of ever-growing technical progress and improvements, necessary changes constantly take place. We therefore thank you for your understanding, as we can not be held responsible for the correctness and completeness of the brochure content due to the reasons mentioned above. We reserve all the rights, especially the right to reproduce and transmit all parts of this publication.

ARX — bring premium quality in your home for a lifetime

ARX is one of the leading providers of window and door hardware In Europe. Brand ARX is built on more than 67 years of foundation and experience of KOVINOPLASTIKA LOŽ. From that knowledge we are drawing the inspiration to create new and innovative solutions. Integrity in everything we do, quality of our work, and tailor-made building hardware solutions for our customers are the secret of our success and harmonious partnership with our customers. .

Window and door hardware tailored to your demands

Concerning costumers our goal is to provide functional, reliable & innovative experience of uncompromising quality that meets the highest standards of window and door hardware. We are focused on developing and applying best solutions in the field, while guaranteeing a flexible and efficient production process. Such approaches, in combination with the established knowledge, enable our experts to design and execute the most appropriate solutions tailored to your demands.

Our values, vision and mission

We are a team of engaged co-workers with the highest values like honesty, excellence, openness, endeavor and responsibility. We always strive to optimally use the knowledge and technologies, by which we develop and create the products and assemblies with higher added value, to ensure end users with a high level of security, wellbeing and best user experience. Our efforts have been rewarded by becoming established well-known development supplier. Being the best flexible and digitized niche solution developer and material modifier is our first and foremost mission.

CONTENTS

ABOUT 1

WHY ARX 6

BETTER THAN THE REST 7

STANDARDS AND CERTIFICATES 9

PRODUCT WARRANTY AND LIABILITY 10

IN-LINE 13

HIGH-QUALITY, DURABLE, SIMPLE 14

SYMBOLS LEGEND 15

SASH ARRANGEMENT 16

DIRECTION OF OPENING 16

PROFILE RECOMMENDATION 17

IN-LINE BASIC SCHEME 18

SINGLE ACTION IN-LINE ESPAGNOLETTE 20
- CAM 8 mm ‖ BS 7 mm 20
- CAM 8 mm ‖ BS 17 mm 21
- HOOK 5 mm ‖ BS 17 mm 22

STRIKERS 23

ROLLERS 24

HANDLES 25

BUFFER STOP 25

SASH PROFILE TREATMENT 26

INDIVIDUAL STRIKER POSITIONING 27

LOCKING CAM ADJUSTMENT INSTRUCTIONS 28

MAINTENANCE INSTRUCTIONS 29

HKS 31

HIGH-QUALITY, DURABLE, SIMPLE 32

SYMBOLS LEGEND 34

SASH ARRANGEMENT 35

DIRECTION OF OPENING 35

COMPARISON OF HKS SYSTEM OPENING 36

PROFILE RECOMMENDATION 37

APPLICATION DIAGRAMS 38
- Tilt & Slide - HKS 38
- Tilt & Slide - HKS 160 kg 38
- Tilt & Slide - HKS 100 kg 38

TILT & SLIDE - HKS 100 / 160 BASIC SCHEME 40

T&T ESPAGNOLETTE M 42
- Centered / variable handle height 42

T&T ESPAGNOLETTE M - larger backsets 43
- Centered / variable handle height 43

T&T ESPAGNOLETTE M - larger backsets + lockable 44
- Centered / variable handle height 44

T&T ESPAGNOLETTE KV 45
- Fixed handle height 45

CONTENTS

CORNER DRIVE 46

ESPAGNOLETTE EXTENSION 46

CENTER LOCK 47
- Vertical 47
- Horizontal 47

STRIKER 48

T&Ti STRIKER 49

SECURITY STRIKER 50

SET OF RAILS 51
- Tilt & Slide - HKS 51

STAY SYSTEM 52
- Tilt & Slide - HKS 52

SET OF BOGIES 52
- Tilt & Slide - HKS 52

HKS 160 SET 53

COVER CAPS HKS 100 53

HANDLES 54
- Window handles 54
- Slide handles 55

LOCKING CAM ADJUSTMENT INSTRUCTIONS 56
- Rolling cam - R 56
- Rolling security cam - RS 57

STRIKER JIGS INSTALLATION INSTRUCTIONS 58
- Types 58
- Instructions for use 59

TOP & BOTTOM RAIL JIG - HKS 59

SASH PROFILE TREATMENT 60
- Window-handle drilling 60
- Gear-case routing 60
- Lock-case drilling 61

SASH HARDWARE INSTALLATION INSTRUCTIONS 62
- Tilt & Slide - HKS 62

FRAME HARDWARE INSTALLATION INSTRUCTIONS 64
- Mounting of bogies 64
- Parallel alignment of bogies 65
- Mounting of guide & bottom track and stay system 66
- Hanging sash 67
- Installation of guide block and sash alignment 68
- Sash alignment 69
- Buffer installation 70
- Bogie safety cover and support arm cover installation 71

MAINTENANCE INSTRUCTIONS 72

LIFT AND SLIDE 73

PASS 77

PRACTICAL AGILE SLIDING SYSTEM 77

HIGH-QUALITY, DURABLE, SIMPLE 78

SYMBOLS LEGEND 79

SASH ARRANGEMENT 80

CONTENTS

DIRECTION OF OPENING 80
PASS SYSTEM OPENING 81
APPLICATION DIAGRAM 82
PROFILE RECOMMENDATION 83
RETRACT & SLIDE - PASS 150 BASIC SCHEME 84
PRODUCT PORTFOLIO 86
- Espagnolettes and extensions 86
- Basic set 87

PROFILE TREATMENT 88
- Espagnolette 88
- Vertical back strikers 89
- Corner guide strikers 90
- Bogies 90
- Middle horizontal strikers 91

STRIKER POSITIONS 92
ADJUSTMENT INSTRUCTIONS 93
MAINTENANCE INSTRUCTIONS 94
NOTES 95

NOTES

Quality-to-price ratio that ensures for the best market performance

Besides its distinctive quality, the ARX building hardware has an excellent quality-to-price ratio, providing you with a fast and effective strategy of winning market positions both in the Europe and globally. We provide the best quality, value, and service to meet our business partners' and users' needs, never leaving them in the lurch.

Accelerating the pace of innovation

Through the years we were never the silent observers of migration from old window and door hardware solutions to the nowadays highly technological ones, tailored for smart homes and buildings. Experiences, engineering knowledge and valuable partnerships helped us respond to and anticipate market needs, adapt our methods or materials, and innovate. Development of high-quality new products that have left a mark on the industry and decades of experience have shaped our unique path.

There is hardware, and then there is ARX.

FOR FULL TERMS AND CONDITIONS, PLEASE VISIT:

BETTER THAN THE REST

Based on the huge versatility of our knowledge implemented into the design and applied research, we do not simply offer you products; we provide you with the following BENEFITS:

ARX lifetime warranty

For you to have complete confidence in our products, proven technologies, and expert skills, like we do, we provide you with a Lifetime Warranty on our building hardware functionality. The warranty applies exclusively to the use of the ARX building hardware, and to all manufacturers and suppliers of doors and windows who use ARX building hardware.

ARX surface protection and resistance coating ARX

Surface protection and resistance coating ARX Coat, provided by Kovinoplastika Lož is one of the best on the market.

Testing of corrosion resistant coating is carried out in our salt chamber according to standard ISO 9227 (NSS). It is done periodically, so we controll the whole process. In case of deviations from perfect surface protection, immediate actions are applied to the manufacturing process to produce only the best products.

ARX building hardware suits the highest requirements of corrosion resistance as it reaches the 5th grade according to the standard EN 1670. That is an equivalent of 480 hours of salt spray.

ARX Coat is a proper surface protection, which provides good anti-corrosion durability and a trendy silver appearance, all due to our ARX internal processes.

BETTER THAN THE REST

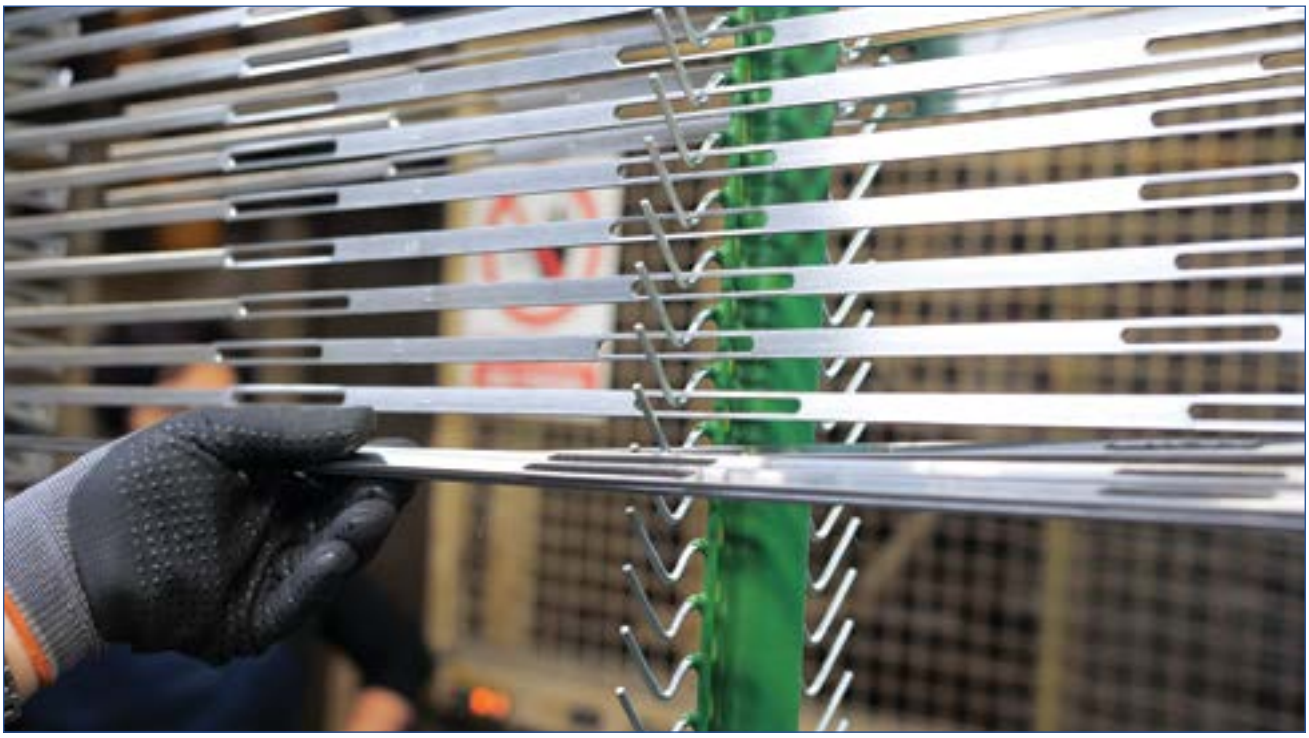

Versatile hardware

ARX's technology enables effortless operation of window sashes and doors. The system can be fitted to a wide range of sizes and allows for simple integration of components during fabrication process.

The ARX building hardware is fully reliable and adjusted to hard climate; it combines the following features:

- High-quality material,
- High quality production and installation of individual hardware sets by using highly automated production,
- Hardware is easy to maintain, providing a simple and environmentally friendly degradation,
- A wide range of use,
- Long-term operation and simple installation,
- Provides a highly automated hardware installation to the sash and window frame,
- Proper surface protection ARX Coat.

With a thoroughly made-out design, the ARX building hardware will add a new value to your windows and doors.

STANDARDS AND CERTIFICATES

Manufacturer´s standards and certificates

Our certificates present our dedication to the verifiable quality standards for processes and products. We are proud that we have repeatedly earned them. In every certificate, we see undisputed proof of long-term commitment to our partners, employees, and leadership.

MANAGEMENT SYSTEM CERTIFICATES:
- ISO 9001
- ISO 14001

CERTIFICATE OF COMFORMITY:
- IFT (QM 328)
- IFT (QM 342)

Kovinoplastika Lož aquired many important standards and certificates. Among them is EN1670 (grade 5) which has been held without interuption.

PRODUCT WARRANTY AND LIABILITY

1. Introduction

According to the instructions of the Quality Association for Locks and Hardware (Gütegemeinschaft Schlösser und Beschläge), the VHBH Directive, issued on 11.12.2009 and the manufacturer's responsibility for its products, defined in the Consumer Protection Act (Consumer Protection Act of the Republic of Slovenia, paragraph 2, §4-11a), the following information about the slide hardware must be observed. Failure to comply with the following information exempts the manufacturer from liability.

2. Product information and stipulated application

2.1 Quality Assurance Association for Locks and Hardware

(Gütegemeinschaft Schlösser und Beschläge) published in the VHBH Directive states that sliding hardware is hardware for sliding sashes, which are used principally used as barriers to the outside.

This hardware is used for:

- bringing sashes into sliding mode, by activation of a handle, into a slide position (IL system),
- bringing sashes into sliding mode, by activation of a handle, into a slide position and bringing sashes into ventilation mode, by activation of a handle, into a vent position (PASS system),
- bringing sashes into ventilation mode, by activation of a handle, into a vent position (SP system),
- bringing sashes into tilt mode, by activation of a handle, into a tilt position (HKS system),
- bringing sashes into sliding mode, by activation of a handle, into a slide position (SP and HKS systems).

Sliding hardware is used for installation in sliding windows and doors which are to be vertically installed.

According to the definition above, the regular function of the sliding hardware is closing the sliding windows and doors and opening them in different airing positions. When the sash is closed, the resistance of a gasket normally needs to be overcome.

2.2 Misuse – exclusion of liability

Misuse is not compliant with the basic purpose of hardware. Anti-theft sliding windows and balcony doors for wet spaces and installation in aggressive and corrosive climate require special hardware with particularly defined characteristics, adjusted to individual building case.

2.3 Restrictions on the use

Open sliding windows and doors only have protective function and do not provide fissure sealing, safety in heavy rain or snow, sound and thermal insulation and anti-theft protection. In windy weather and in case of draught, sliding windows or doors must be closed and bolted. Windy weather and draught logically mean that a sliding window or door open and close automatically and uncontrollably in one of the open positions due to air pressure or whirlwind. The only way to make a sliding window or door fixedly open, is to install additional hardware elements.

2.4 Use in case of special requirements

Wind resistance of the closed and bolted sliding window or door depends on the actual structure of the sliding window or doors. In case a sliding window or door has to endure wind load, according to the DIN EN 12210 standards (in particular pressure test p3), suitable hardware compilations are to be matched in relation to the respective window design and frame material, and each case individually agreed upon.

Anti-theft sliding windows and doors for wet spaces and installation in aggressive and corrosive climate require special hardware with particularly defined characteristics, adjusted to individual building case.

In general, sliding hardware meets the requirements according to the DIN 18025 standards, applicable to open-type buildings. To this end, particular agreements and adjustments regarding the appropriate hardware structure and its installation on windows and doors are required.

3. Misuse of the product

Misuse of the sliding hardware for sliding window and door (i.e. the use, non-compliant with intended use of the product) includes the following:

- inserting obstacles in the opening vicinity between the frame and sash and thus preventing the proper specified use,
- if, contrary to the instructions of use, the sash is uncontrollably pushed toward the window reveals (e.g. because of the wind), causing damage or destruction of hardware, sash material or other parts of the window and the sash,
- additional load on the sliding window's or door's sashes (if, for example, children swing on the windows or door sashes),
- inserting a hand or an object into the rebate between the window and the sash when closing the sliding window or doors (risk of injury).

4. Product warranty

The manufacturer of ARX building hardware provides a lifetime warranty on functionality and a 10-year warranty on surface protection, starting from the date of delivery of goods that is defined or can be defined and applies to the territory of the EU.

The warranty applies exclusively to the use of ARX building hardware components. The warranty applies to all manufacturers and suppliers of sliding windows and doors who use ARX building hardware, delivered at their delivery or production after April 1, 2021.

For more information please check warranty conditions on webpage - **www.arx-hardware.com.**

5. Product characteristics – manufacturer's instructions for use

5.1 Maximum sash weights

The maximum sash weight for individual hardware installation must not be exceeded. The construction element with the smallest possible permissible load defines the maximum weight of the sash. Application diagrams and component classification must be considered.

5.2 Sash sizes

Application diagrams show the relationship between the permissible sash rebate heights, depending on various glass weights i.e. total glass weight. The calculated sash dimensions in the rebate or the sash formats (portrait and/or landscape format), as well as the maximum sash weight must not be exceeded under any circumstances.

5.3 Hardware combination

The manufacturer's regulations, regarding the combination of hardware (i.e. the application of additional stay arms, the hardware design for anti-theft sliding windows and door sashes), must be followed.

5.4 Hardware functionality

Permanent hardware functionality can be ensured by consistently following the rules below:

- Professional installation of hardware components must be performed according to the attached instructions for installation,
- hardware assembly in the process of sliding window or door installation is to be done professionally,
- the sliding window or door manufacturer must deliver the instructions for use and maintenance to the user, along with the guidelines regarding product warranty.

6. Product maintenance

Hardware components, important for safety, must be checked at least once a year for fitting tightness and tight fitting. If necessary, the fixing screws can be additionally fastened and the component parts replaced. The following maintenance work must be performed at least once a year:

- Greasing and functional control of all the movable parts and all the locking points of the sliding hardware.
- only the cleaning and maintenance agents, which do not reduce the anti-corrosion hardware protection, may be used.

Hardware installation or mounting must be provided by highly-qualified experts. In case of surface treatment for sliding windows and doors (e.g. varnishing), all the hardware components must be excluded from treatment; they must also be protected against potential contamination, caused by surface treatment.

6.1 Maintaining the quality of surface treatment

In normal climate, the galvanized coating is not damaged by corrosion, as long as condensed water is not produced in hardware parts or if the condensed water quickly dries up.

In order to maintain long-lasting quality of surface treatment and prevent adverse corrosion effects, the instructions below must be followed:

- Hardware and window rebates must be thoroughly aired (particularly during the construction phase) by making sure that the elements mentioned are not exposed to moisture and condensed water,
- hardware must be protected against any covers or contamination with building materials (e.g. roughcast, dust, cement and the like),
- aggressive vapours in the sliding window or door rebate (e.g. formic acid and acetic acid, ammonia, amino- and ammonium compounds, aldehyde, phenol, tannic acid etc.) may quickly lead to corrosion of hardware components in combination with a small amount of condensed water; in case of aggressive vapours, thorough airing of rebates on the sliding windows and doors must be provided; this is particularly important for sliding windows and doors made of oak and other types of wood, containing a large amount of tannic acid,
- gaskets with acetic acid or acidic net structure or gaskets, containing the above mentioned ingredients must not be used, as the direct contact with the gasket and its vapours may corrode the hardware surface,
- hardware can only be cleaned with soft, ph-neutral cleaning agent in diluted form; aggressive, acidiferous cleaners or abrasive cleaning agents, containing the above mentioned ingredients, must not be used at any time.

7. Information and instructions

In order to carry out duties of informing and giving instructions and performing maintenance according to »Consumer Protection Act«, the following publications are available:

- »Catalogues« for designers and authorized dealers
- »Installation instructions« and »factory drawings« for manufacturers of windows and balcony doors,
- »instructions for maintenance and cleaning« and »Instructions for use« for investors and users.

In order to ensure the functionality of the sliding hardware for windows and doors, the following rules must be observed:

- The designers are required to obtain information from the manufacturer or the authorized dealer, regarding the products, and act accordingly,
- the authorized dealers must pay attention to product information and the information mentioned herein, along with installation instructions, factory drawings and instructions for maintenance and cleaning; they must obtain instructions for use from the manufacturer and pass them on to manufacturers of sliding windows and doors,
- the manufacturers of sliding windows and doors must consider all the relevant product information and ask the manufacturer or authorized dealer for maintenance and
- cleaning instructions in particular, along with instructions for use and pass them on to investors and users.

All information regarding sliding hardware systems for windows and doors should be observed. In case of non-compliance the manufacturer is exempt from liability.

PROAL

In-Line

Basic schemes
Pruposed guideline
Product portfolio
Detailed information

HIGH-QUALITY, DURABLE, SIMPLE

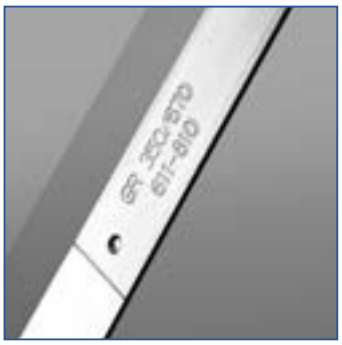

ARX Coat – High quality surface protection

ARX Coat surface protection gives excellent appearance to building hardware and simultaneously ensures long-term and durable surface.It maintains very high corrosion resistance in severe conditions and extreme climate, exceeding Grade 5 of BS EN1670 (480 hours exposure to salt spray), thereby guaranteeing long-term and simple use.

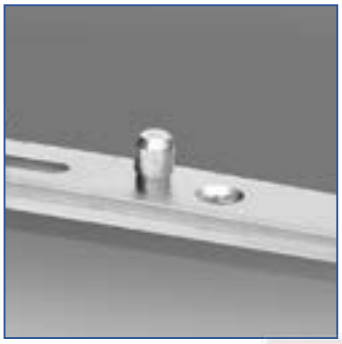

Anti-lift pin

This simple, yet innovative pin prevents the sliding window or door from being lifted off the rails, when in closed position.

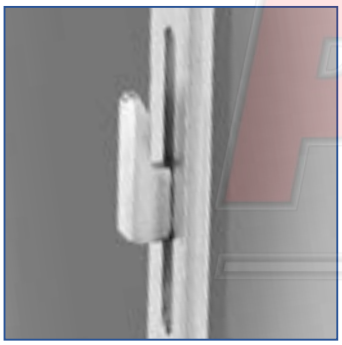

In-Line hook

Stainless steel in-line hooks offer increased security in comparison with security cams, but they lack the adjustment for gasket pressure.

Security cam

Security cams are adjustable, so it is possible to adjust the cam to achive better gasket pressure. With great level of compression adjustment (+/- 1 mm), it is a perfect solution for optimal sealing.

Symbols

In the part describing the In-Line system, different symbols, diagrams and tables are used in order to provide a clear picture and demonstration of the hardware application. The meanings are as follows:

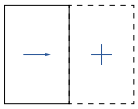
In-Line

Rebate sash height

Rebate sash width

Max. sash mass

Material number

Security cam

IL Hook

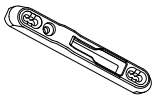
IL individual striker

Packaging

Length / dimension

Abbreviation	Description	Units
SRH	SASH REBATE HEIGHT	mm
SRW	SASH REBATE WIDTH	mm
BS	BACKSET	mm
H	NUMBER OF IL HOOKS	/
S	NUMBER OF SECURITY CAMS	/
L	LENGTH	mm
W	WIDTH	mm
M	MAX. LOAD FOR SET (2 PCS)	kg
Y	HEIGHT ADJUSTMENT	mm

SASH ARRANGEMENT

SCHEME A

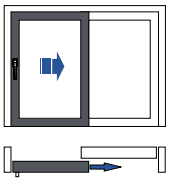

SCHEME GA

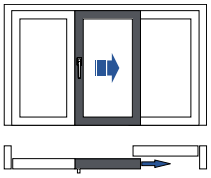

SCHEME D

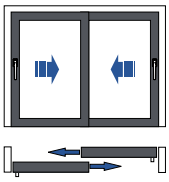

SCHEME K

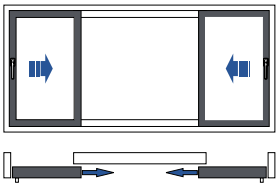

DIRECTION OF OPENING

OUTSIDE

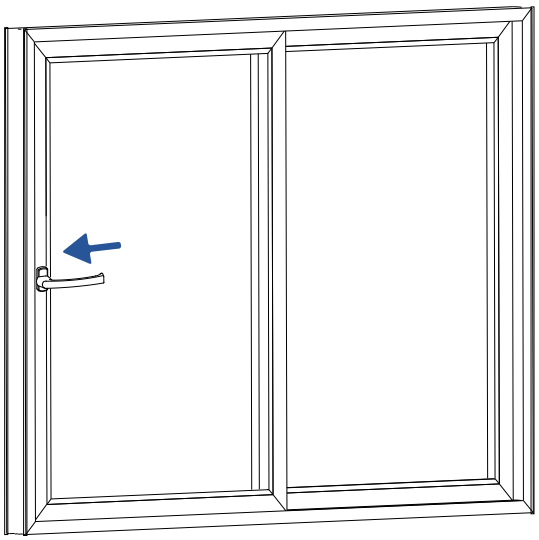

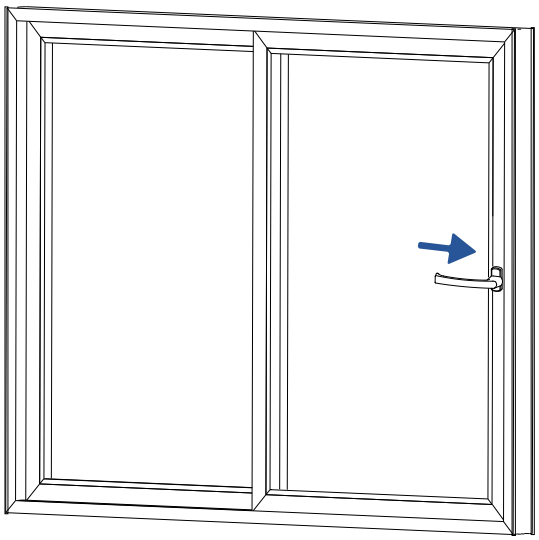

INSIDE

DIN EN 12519 - Right

ARX - Left direction

DIN EN 12519 - Left

ARX - Right direction

Profile dimensioning for PVC

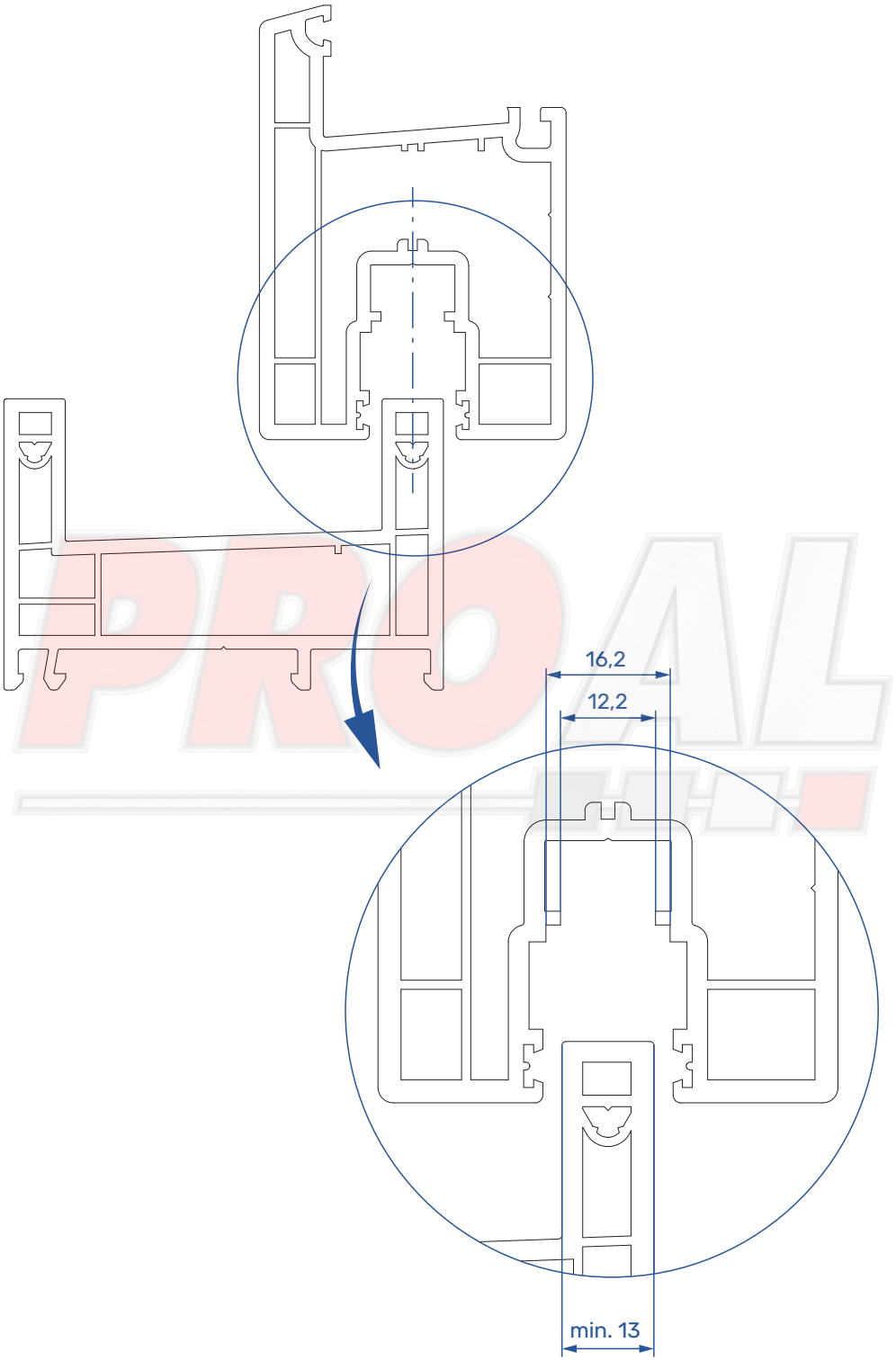

IN-LINE BASIC SCHEME

1 SINGLE ACTION ESPAGNOLETTES

CAM 8 mm | BS 7	PAGE 20
CAM 8 mm | BS 17 | LOCKABLE	PAGE 21
HOOK 5 mm | BS 17	PAGE 22
HOOK 5 mm | BS 17 | LOCKABLE	PAGE 22

2 STRIKERS

INDIVIDUAL STRIKER	PAGE 23
ONE PIECE STRIKER	PAGE 23

3 ROLLERS

LIGHT ROLLER 100 kg	PAGE 24
STANDARD ROLLER 150 kg	PAGE 24
HEAVY DUTY ROLLER 200 kg	PAGE 24

4 IN-LINE HANDLES

HANDLE	PAGE 25
HANDLE - LOCKABLE	PAGE 25
POP-UP	PAGE 25
POP-UP - LOCKABLE	PAGE 25

5 ACCESSORIES

BUFFER STOP	PAGE 25

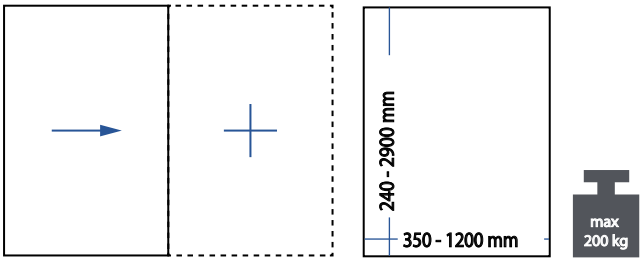

PROAL

* MAX. SRW / SRH RATIO = 1 : 2,5

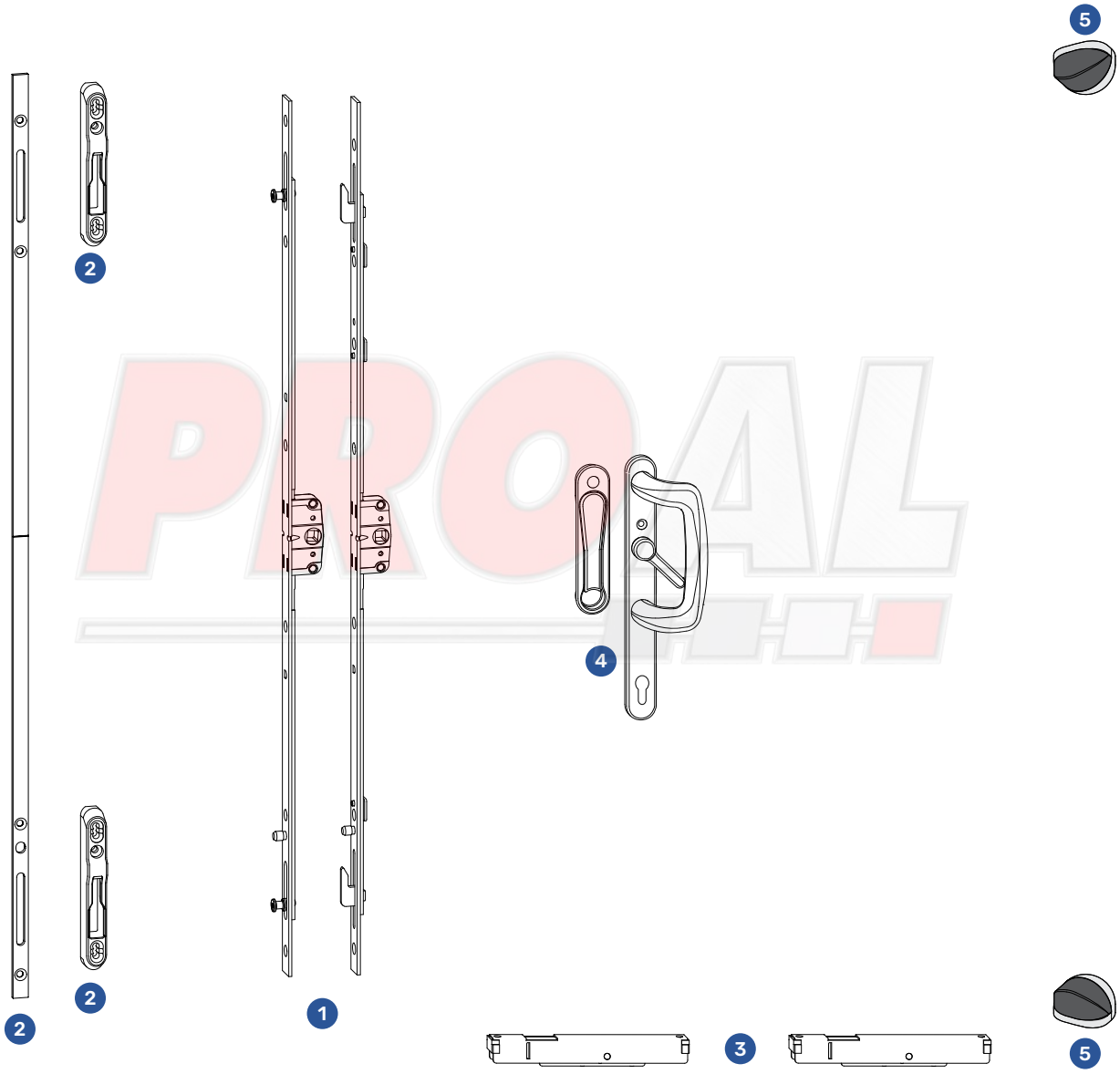
5
2
4
2
2
1
3
5

SINGLE ACTION IN-LINE ESPAGNOLETTE

CAM 8 mm || BS 7 mm

ESPAGNOLETTES

SRH	L	S	PACK	MATERIAL
400 - 600	400	2	10	1110657
601 - 800	600	2	10	1110658
801 - 1000	800	2	10	1110659
1001 - 1200	1000	3	10	1110660
1201 - 1800	1200	3	10	1110661
1801 - 2900	1800	4	10	1110662

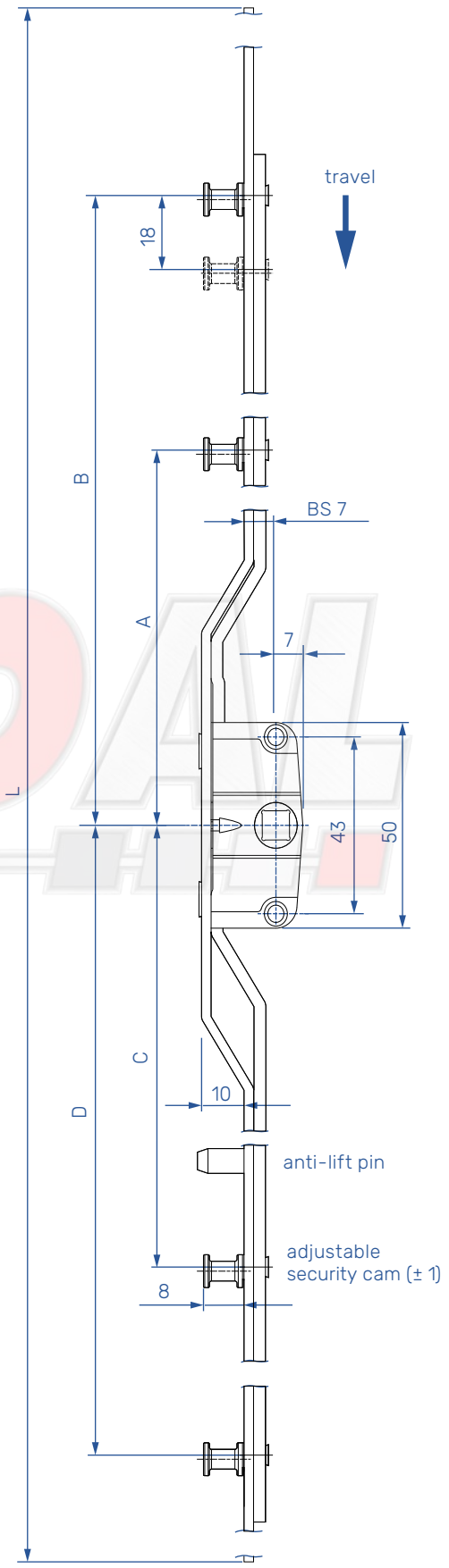

KEY DIMENSIONS OF ESPAGNOLETTES

L	A	B	C	D
400	•	143	•	127
600	•	243	•	227
800	•	343	•	327
1000	128	443	•	427
1200	128	543	•	527
1800	466	881	429	774

* FOR SASH PROFILE TREATMENT PAGE 26

SINGLE ACTION IN-LINE ESPAGNOLETTE

CAM 8 mm || BS 17 mm

ESPAGNOLETTES

SRH	L	S	PACK	MATERIAL
240 - 400	240	2	10	1110663
400 - 600	400	2	10	1110664
601 - 800	600	2	10	1110665
801 - 1000	800	2	10	1110666
1001 - 1200	1000	3	10	1110667
1201 - 1800	1200	3	10	1110668
1801 - 2900	1800	4	10	1110669

LOCKABLE ESPAGNOLETTES

SRH	L	S	PACK	MATERIAL
1801 - 2900	1800	4	10	1110670

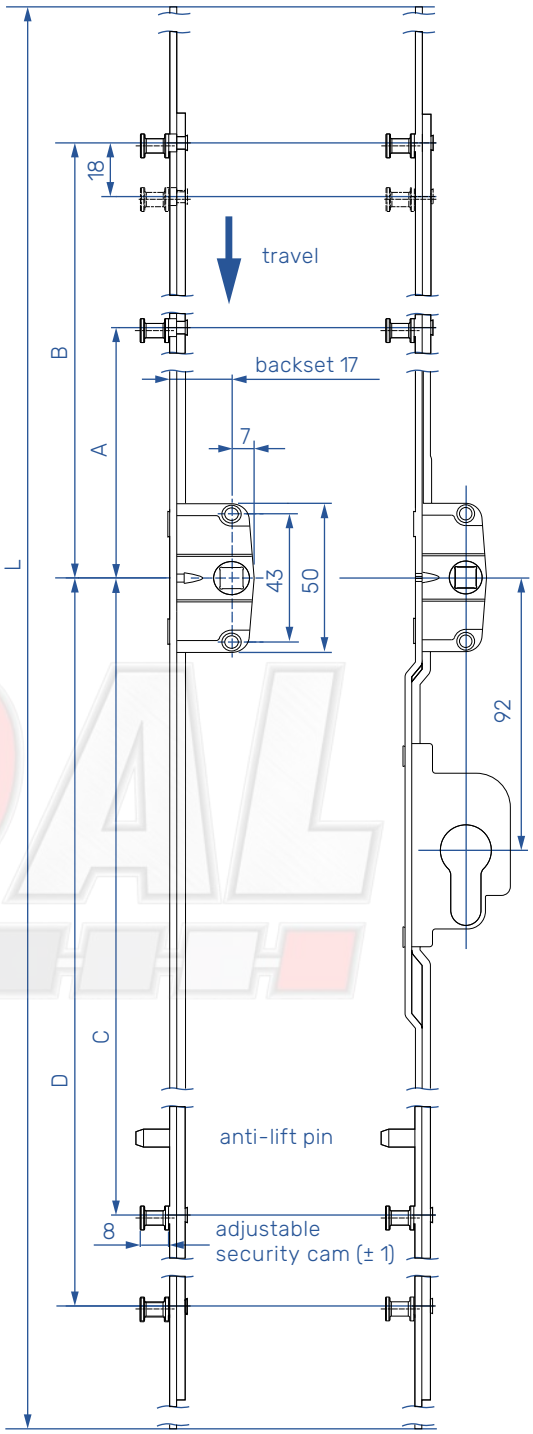

KEY DIMENSIONS OF ESPAGNOLETTES

L	A	B	C	D
240	•	88	•	72
400	•	143	•	127
600	•	243	•	227
800	•	343	•	327
1000	128	443	•	427
1200	128	543	•	527
1800	466	881	429	774

KEY DIMENSIONS OF LOCKABLE ESPAGNOLETTES

L	A	B	C	D
1800	466	881	429	774

* FOR SASH PROFILE TREATMENT PAGE 26

SINGLE ACTION IN-LINE ESPAGNOLETTE

HOOK 5 mm || BS 17 mm

ESPAGNOLETTES

SRH	L	H	PACK	MATERIAL
600 - 1800	600	2	10	1110671
1801 - 2900	1800	4	10	1110672

LOCKABLE ESPAGNOLETTES

SRH	L	H	PACK	MATERIAL
1801 - 2900	1800	4	10	1110673

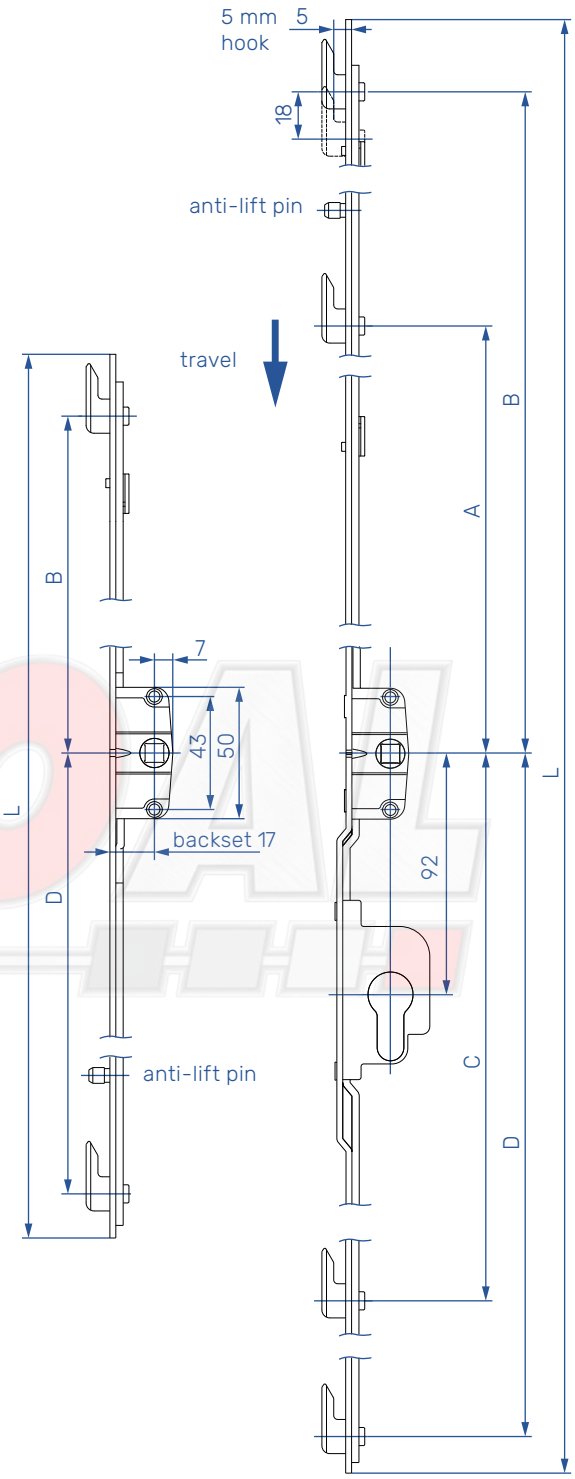

KEY DIMENSIONS OF ESPAGNOLETTES

L	A	B	C	D
600	•	243	•	228
1800	463	808	432	777

KEY DIMENSIONS OF LOCKABLE ESPAGNOLETTES

L	A	B	C	D
1800	463	808	432	777

* FOR SASH PROFILE TREATMENT PAGE 26

STRIKERS

1 INDIVIDUAL IL STRIKERS

PROFILE	PACK	MATERIAL
ALUPLAST	100	1070140
EUROPA	50	1119188
FINS	100	1070141
ORTA	100	1070140
PROFINE KBE	100	1070140
PROFINE KOMMERLING	100	1070140
PROFINE KOMMERLING SF2 - LEFT	50	1007336
PROFINE KOMMERLING SF2 - RIGHT	50	1007335
PROFINE TROCAL	100	1070141
REHAU/DECEUNINCK	100	1129151
SCHUCO	100	1070140
THYSSEN	100	1070141
VEKA	100	1070141
VHS HALO	50	1119189

2 NIGHT VENT STRIKER

NIGHT VENT STRIKER	100	1155648

2.1 PACKERS

SLINOVA	100	1155650
C 70	100	1155652
GEALAN 74	100	1155660
PREMILINE	100	1155661

3 ONE PIECE IL STRIKERS

L	W	HOOK / CAM	PACK	MATERIAL
600	10	2	40	1110684
1800	10	4	10	1110685
1800	15	4	20	1110683
1800 [1)]	15	4	10	1110687

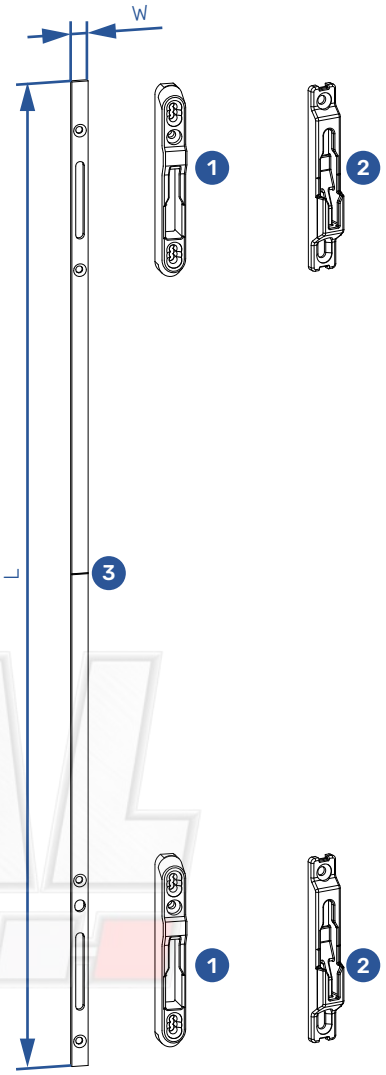

SCREWS FOR FIXING HARDWARE COMPONENTS

TYPE	DESCRIPTION	SIZE	MATERIAL
1	SCREW	4,2 x 25 mm	1134209
2	SCREW	4,2 x 35 mm	1134210

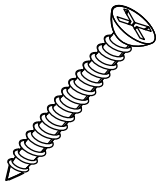

* ALL STRIKERS HAVE ANTI-LIFT PIN HOLE

[1)] WITH CL HOLDER - FOR GROOVE

ROLLERS

TYPE	DESCRIPTION	M (max. 100 kg)	H	W	Y	L	PACK	MATERIAL
1	LIGHT-WEIGHT ROLLER	100	20	12	6	157	1	1091223
2	HEAVY-DUTY ROLLER	200	20	16	5	153	1	1088924

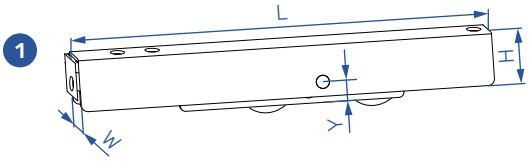

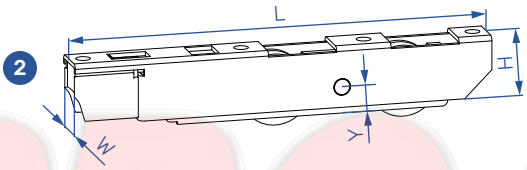

PROAL

ROLLER HEIGHT ADJUSTMENT TOOLS

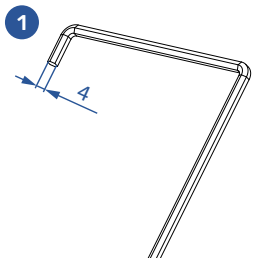

TYPE	DESCRIPTION	ROLLER	SIZE	MATERIAL
1	HEX KEY	1, 3	4 mm	1095750

HANDLES

TYPE	DESCRIPTION	COLOR	PACK	MATERIAL
1	IN-LINE HANDLE LOCKABLE	WHITE	1	1117160
		BLACK	1	1117162
		CHROME	1	1130975
		GOLD	1	1130977
		SILVER	1	1130979
2	POP-UP HANDLE	WHITE	30	1014302
3	POP-UP HANDLE LOCKABLE	WHITE	30	1014303

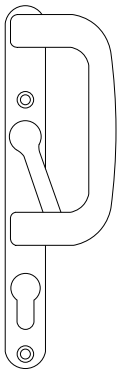

1

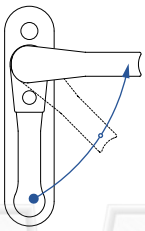

2

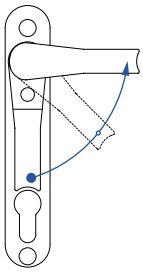

3

PROAL

BUFFER STOP

TYPE	DESCRIPTION	COLOR	PACK	MATERIAL
1	BUFFER STOP WITH RUBBER	GREY BROWN	100	1120498
		BLACK	100	1120512
		WHITE	100	1120495
		SILVER	100	1120516
2	RUBBER	BLACK	100	1120500

1

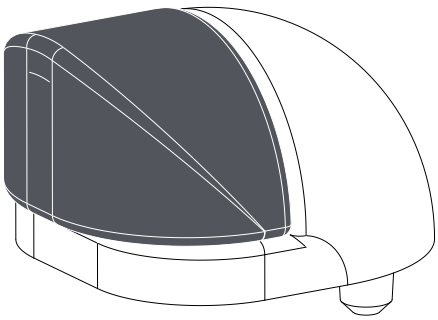

2

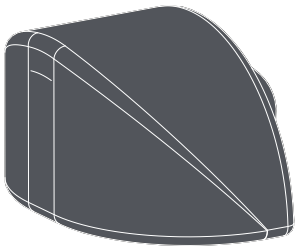

BS 7 - non lockable

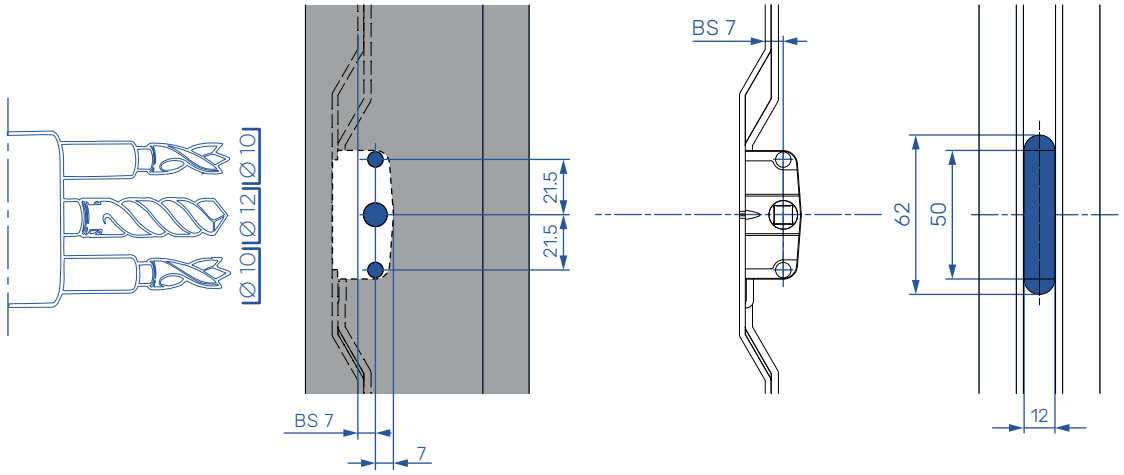

BS 17 - non lockable

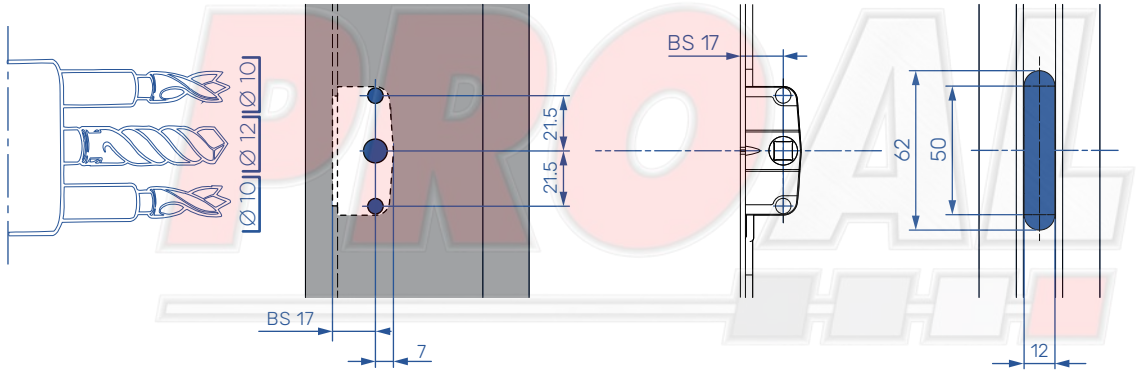

BS 17 - lockable

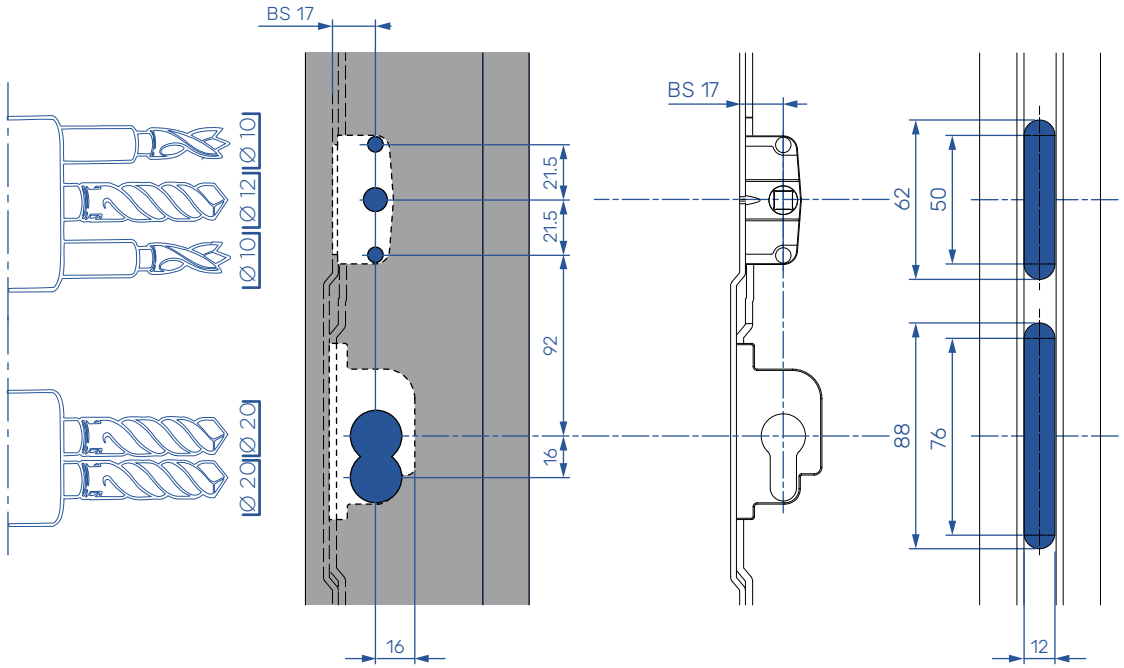

INDIVIDUAL STRIKER POSITIONING

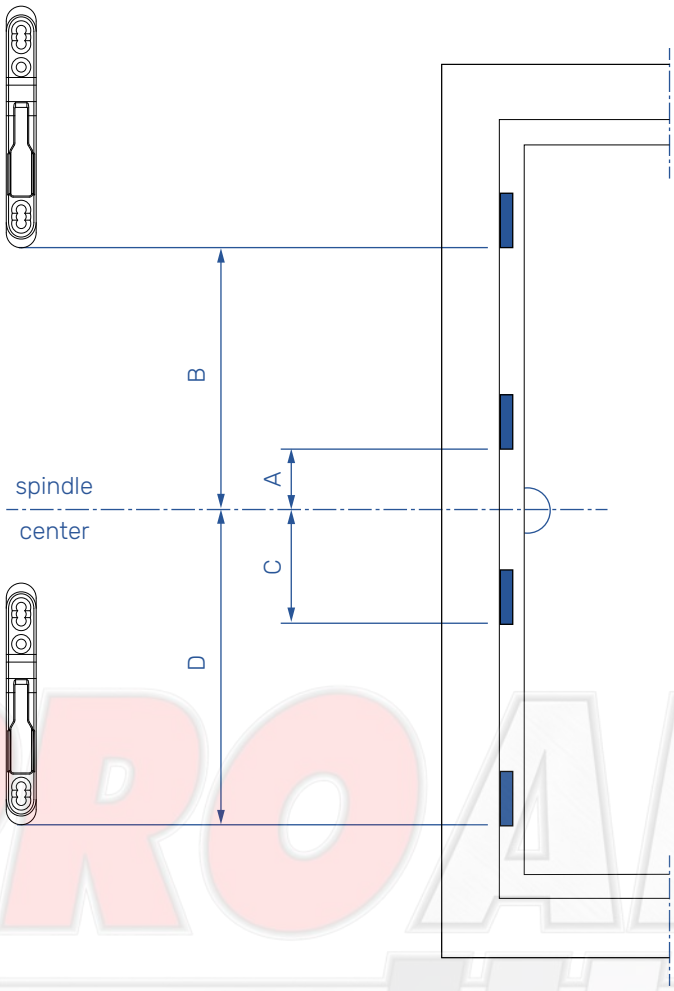

ESPAG. - CAM 8 mm || BS 7 mm

L	CAM	A	B	C	D
400	2	•	93	•	177
600	2	•	193	•	277
800	2	•	293	•	377
1000	3	78	393	•	477
1200	3	78	493	•	577
1800	4	416	761	479	824

ESPAG. - HOOK 5 mm || BS 17 mm

L	HOOK	A	B	C	D
600	2	•	489	•	281
1800	4	411	756	484	829
1800 [1]	4	411	756	484	829

ESPAG. - CAM 8 mm || BS 17 mm

L	CAM	A	B	C	D
240	2	•	38	•	122
400	2	•	93	•	177
600	2	•	193	•	277
800	2	•	293	•	377
1000	3	78	393	•	477
1200	3	78	493	•	577
1800	4	416	761	479	824
1800 [1]	4	416	761	479	824

[1] LOCKABLE

LOCKING CAM ADJUSTMENT INSTRUCTIONS

ADJUSTMENT

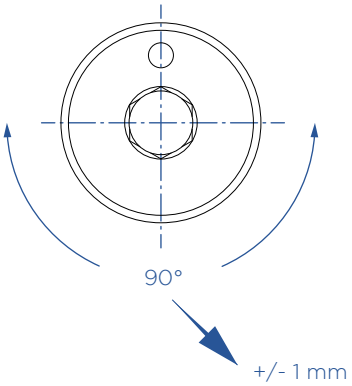

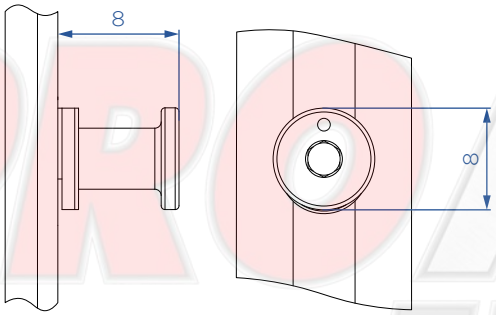

SECURITY CAM ADJUSTMENT TOOL

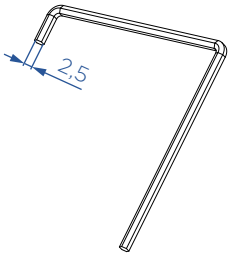

HEX KEY 2,5 mm

DESCRIPTION	SIZE	MATERIAL
HEX KEY	2,5 mm	/

MAINTENANCE INSTRUCTIONS

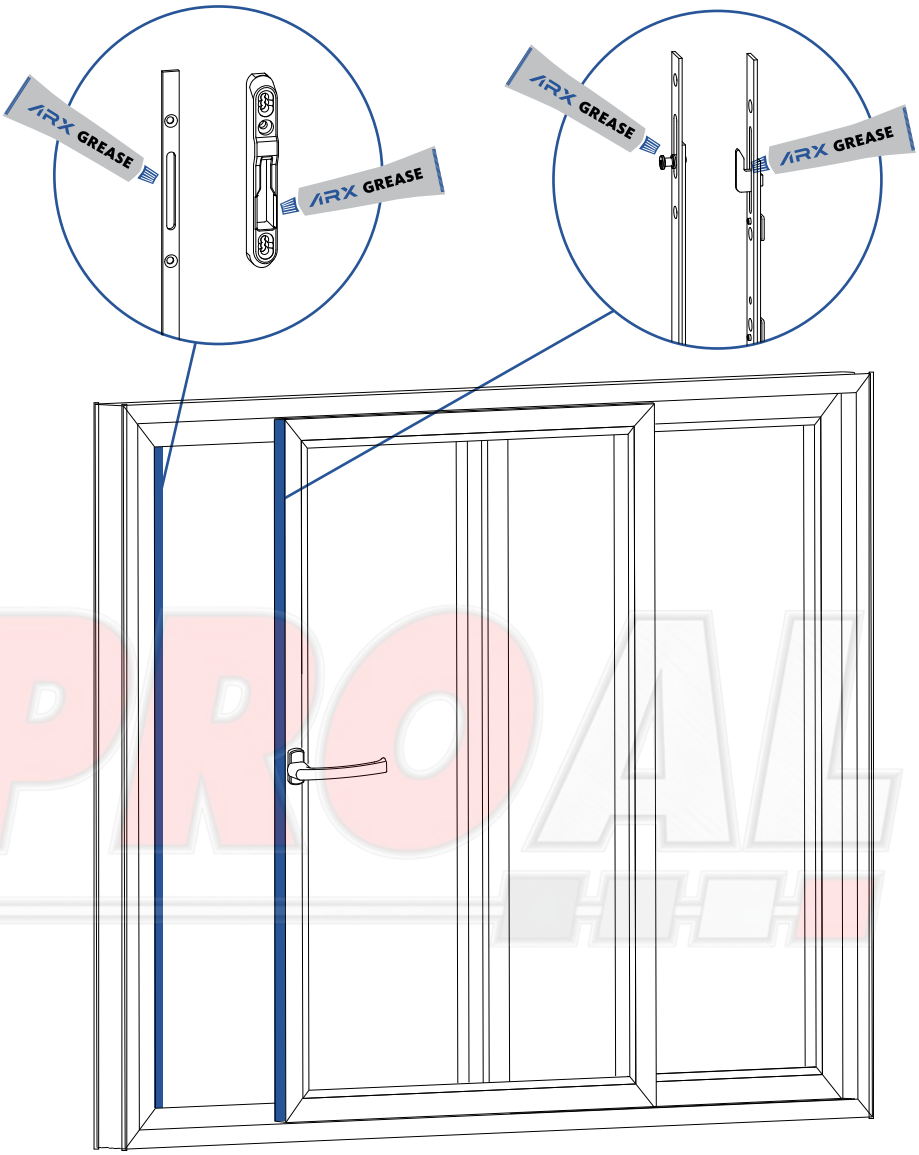

Regular greasing and oiling of operation-relevant components in the sash and frame is recommended at least once a year. In case of frequent use as in schools, hotels the oiling is recommended once in six months.

Acid free and non–resinous grease and/or oil from a specialized dealer must be used.

DESCRIPTION	MATERIAL
ARX - HIGH QUALITY HARDWARE GREASE	1055144

PROAL

HKS

Basic schemes
Pruposed guideline
Product portfolio
Detailed information

HIGH-QUALITY, DURABLE, SIMPLE

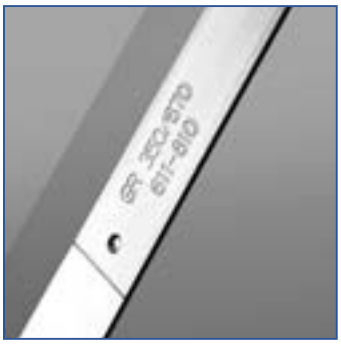

ARX Coat – High quality surface protection

ARX Coat surface protection gives excellent appearance to building hardware and simultaneously ensures long-term and durable surface.It maintains very high corrosion resistance in severe conditions and extreme climate, exceeding Grade 5 of BS EN1670 (480 hours exposure to salt spray), thereby guaranteeing long-term and simple use.

R cam

R cams incorporate a regulatory function which allows installer or user to optimize the window compression by +/- 1,2mm, thereby improving the sealing properties of windows and balcony doors. Moreover, the R cams provide smoother operation to window users who only need to apply a minimum force in order to operate the handle.

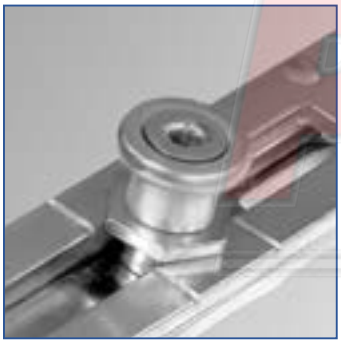

RS cam

RS cams provide superior level of security at closing points (with security strikers). Their height adjusts automatically to fit the air-gap between sash and frame. The compression can be regulated by +/- 0.8mm (hex key size 2.5 or spanner size 10). The rolling cam enables smoother and easier closing operation. RS cams can be used in combination with both security strikers or standard strikers.

Imprinted bumps on faceplate

ARX's easy move is additionally helped by imprinted bumps on faceplates which successfully reduce friction and surface protection wear.

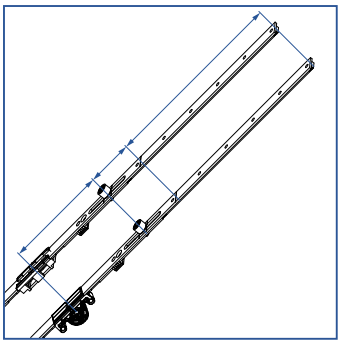

Center locks and DK M espagnolettes - uniform length

All center locks for slide hardware are made in uniform length with DK M espagnolettes. Both are made in same lengths and with the same number of cams.

HIGH-QUALITY, DURABLE, SIMPLE

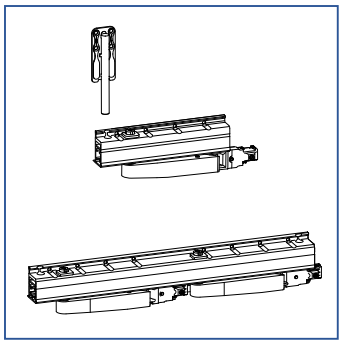

SP - max. sash weight up to 200 kg

For smaller sliding windows and doors, you can choose basic SP bogies set, which are meant to work at maximum load 160 kg. When choosing TWIN bogies with bigger sashes, this max. load capacity increases to 200 kg. That way, you can enjoy more, observing the nature through large glass window.

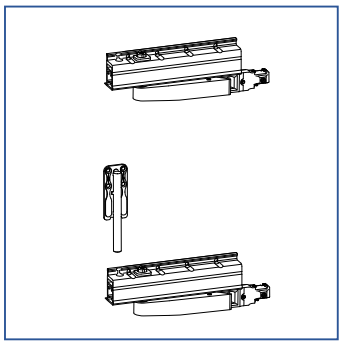

HKS - max. sash weight up to 160 kg

For smaller sliding windows and doors, you can choose basic HKS bogies set, which are meant to work at maximum load 100 kg. When adding support arms on bogies, this max. load capacity increases to 160 kg.

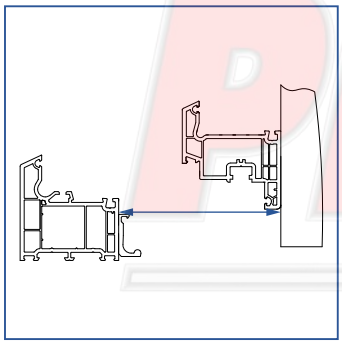

Opening width

This system allows for the sash to move from the frame up to 125 mm away. This proves that it is an excellent choice, when it comes to deep sash profiles.

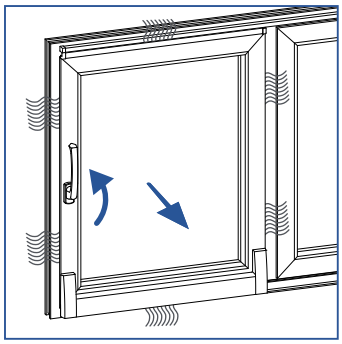

SP - night ventilation

When turning the handle up, the sash retracts from the frame for 5 mm. That way the sash is securely in place because of the combination of SP strikers and RS cams. The opening between the sash and the frame allows for the air to circulate and ventilate the inside of your home.

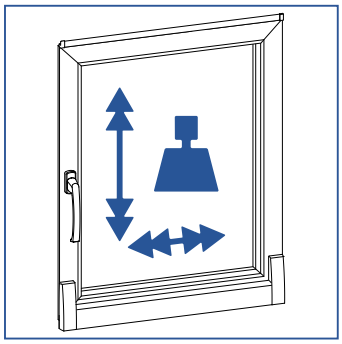

Large dimensions & heavy loads

Thanks to the rugged design of its stays and bogies, the hardware can be used for sash rebate heights of up to 2700 mm. This fitting system is meeting the architectonic challenge for floor-to-ceiling window doors.

Symbols

In the part describing the Tilt & Slide and Retract & Slide systems, different symbols, diagrams and tables are used in order to provide a clear picture and demonstration of the hardware application. The meanings are as follows:

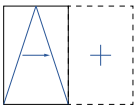
Tilt & Slide

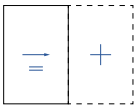
Retract & Slide

Rebate sash height

Rebate sash width

Handle height

R cam

RS cam

Night vent

Warning

Max. sash mass

Material number

Orientation / postiton

Hardware shortening

R cam

RS cam

Standard striker

Security striker

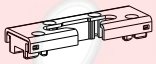
T&Ti security striker

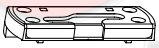
SP striker

Screws

Packaging

Length / dimension

Abbreviation	Description	Units
SRH	SASH REBATE HEIGHT	mm
SRW	SASH REBATE WIDTH	mm
HH	HANDLE HEIGHT	mm
BS	BACKSET	mm
M	MAX. SASH MASS	kg
SRH : SRW	MAX. RATIO BETWEEN SRH AND SRW	/

SASH ARRANGEMENT

SCHEME A

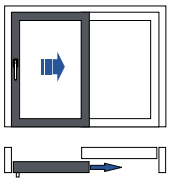

SCHEME GA

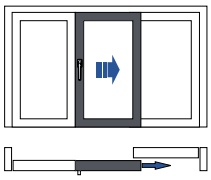

SCHEME K

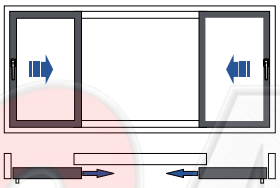

DIRECTION OF OPENING

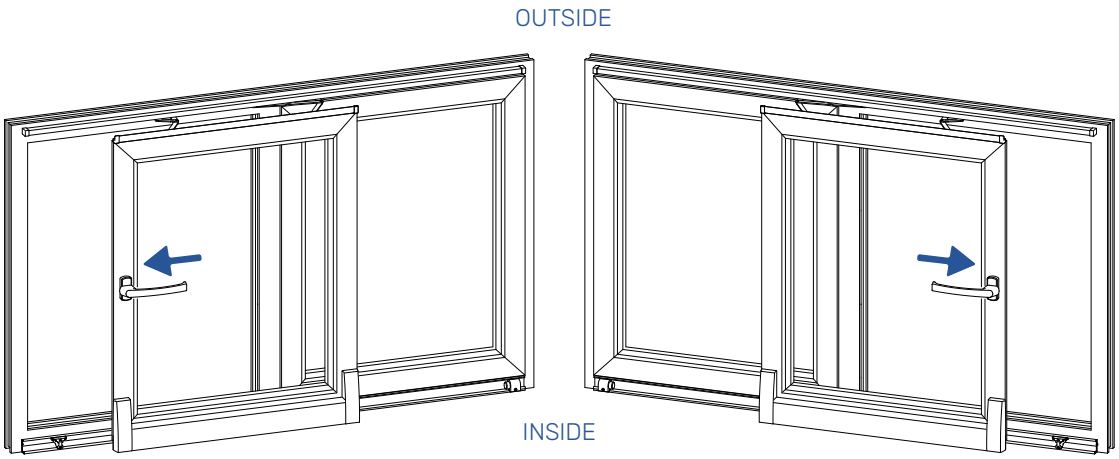

DIN EN 12519 - Right

ARX - Left direction

DIN EN 12519 - Left

ARX - Right direction

COMPARISON OF HKS SYSTEM OPENING

TILT & SLIDE - HKS

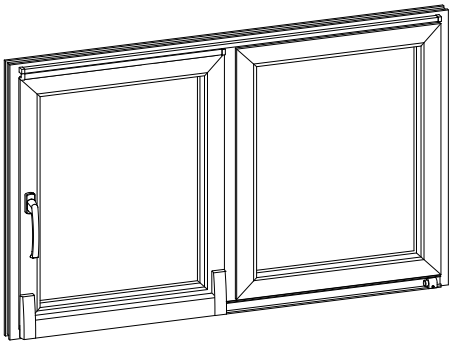

CLOSED POSITION

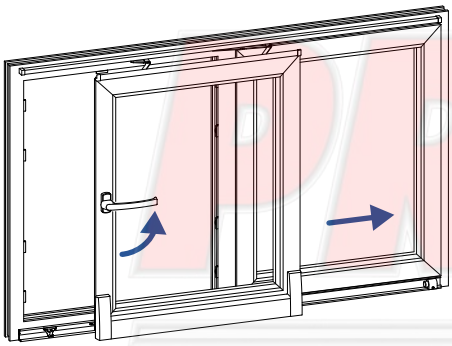

SLIDE POSITION

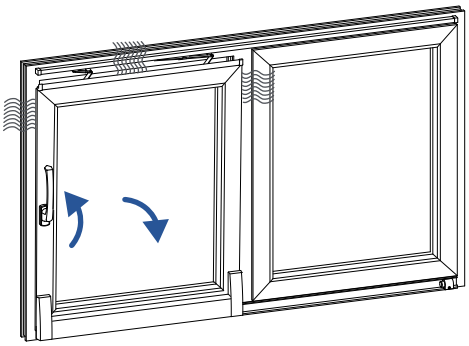

TILT POSITION

RETRACT & SLIDE - SP

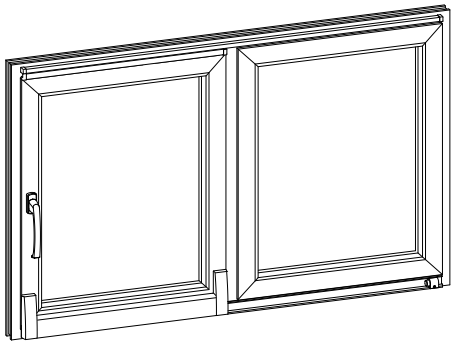

CLOSED POSITION

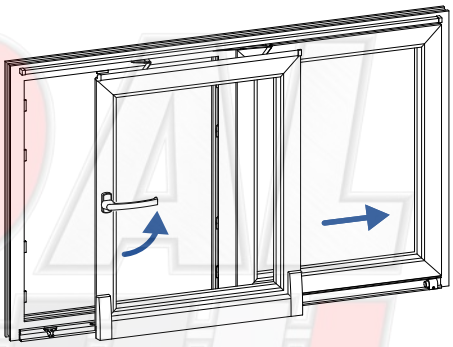

SLIDE POSITION

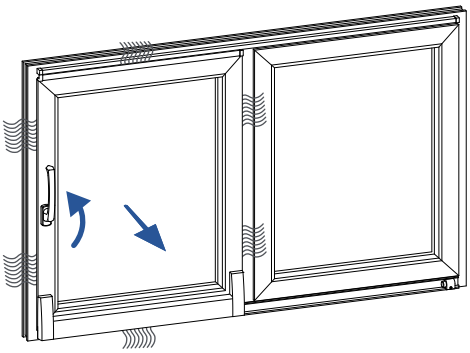

VENTILATION POSITION

Profile dimensioning for PVC

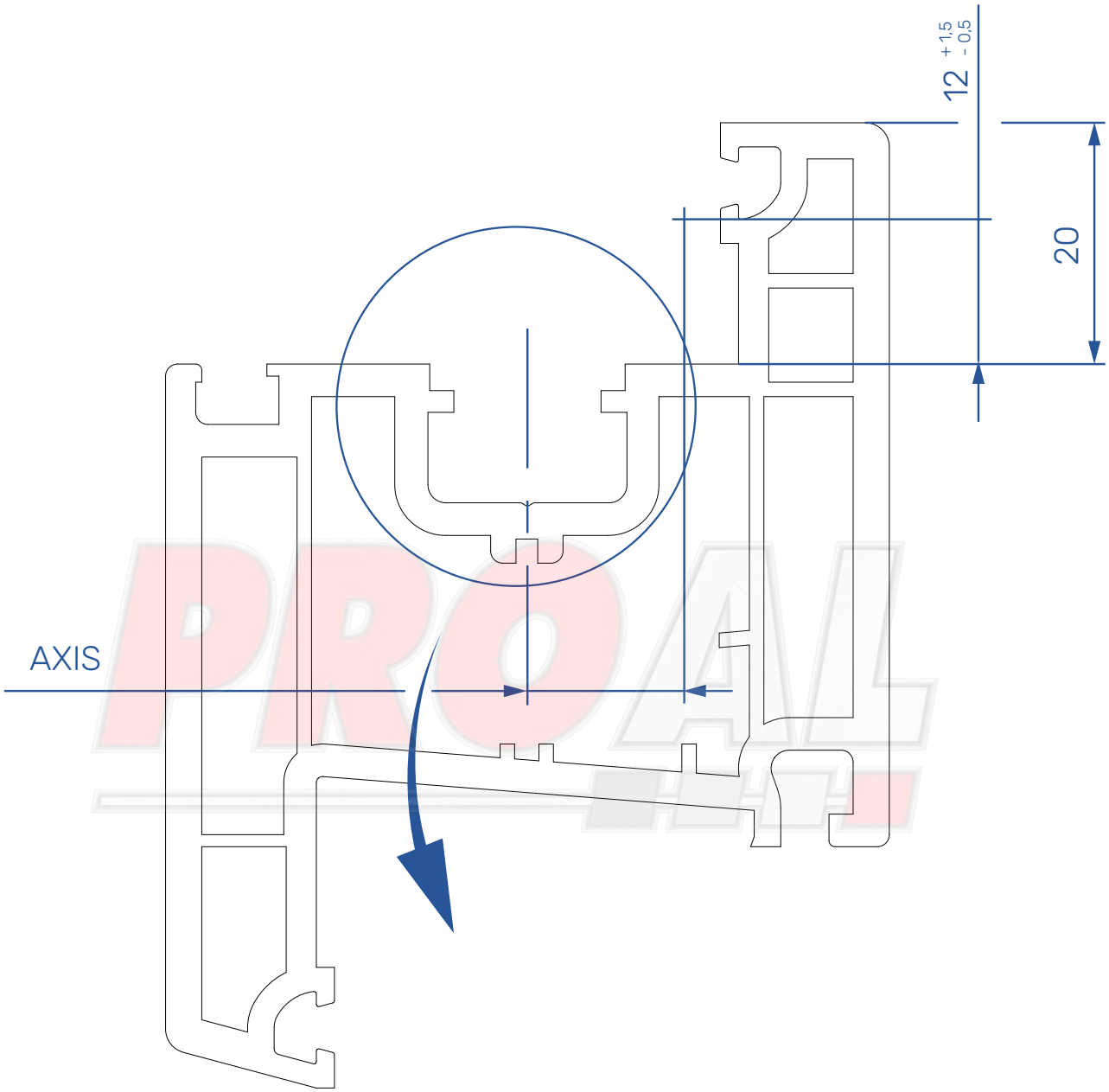

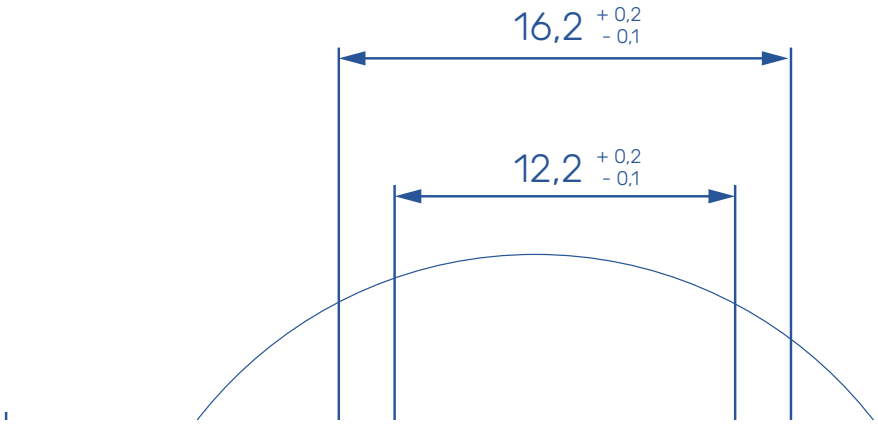

* CONCEALED HINGES
** FACE-FIT HINGES

Tilt & Slide - HKS 160 kg

APPLICATION DIAGRAM

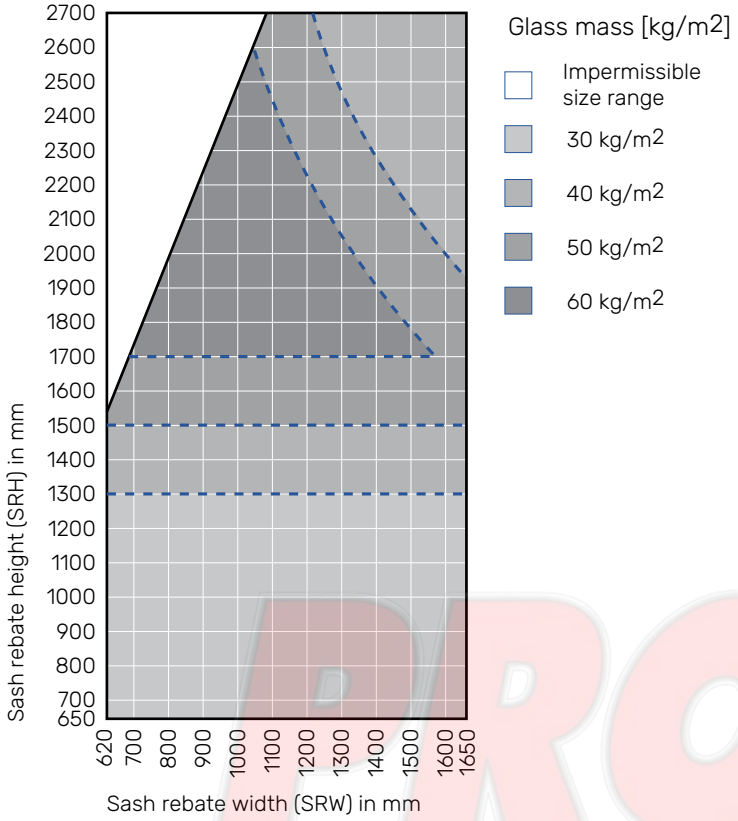

SRH	650 - 2700
SRW	620 - 1650
M	160
max. SRW : SRH	1 : 2,5

Tilt & Slide - HKS 100 kg

APPLICATION DIAGRAM

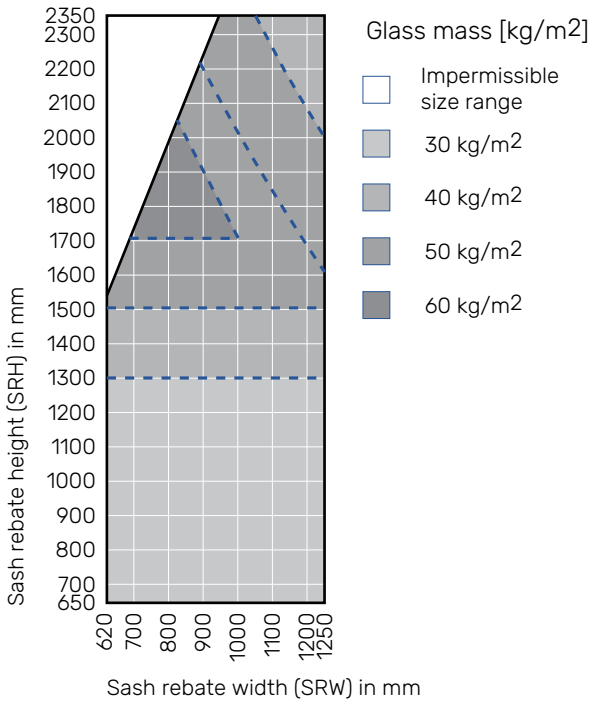

SRH	650 - 2350
SRW	620 - 1250
M	100
max. SRW : SRH	1 : 2,5

PROAL

TILT & SLIDE - HKS 100 / 160 BASIC SCHEME

1 BOGIES SET PAGE 53

2 SET OF RAILS PAGE 51

3 STAY SYSTEM PAGE 52

4 COVER CAP PAGE 54

5 SET 160 kg (COVER CAP & SUPPORT ARM) PAGE 54

6 T&T ESPAGNOLETTE
- T&T ESPAGNOLETTE M BS14,5 PAGE 42
- T&T ESPAGNOLETTE M BS>14,5 PAGE 43
- T&T ESPAGNOLETTE M BS>14,5 LOCKABLE PAGE 44
- T&T ESPAGNOLETTE KV BS14,5 PAGE 45

7 CORNER DRIVE - TOP PAGE 48

8 CORNER DRIVE RS - BOTTOM PAGE 48

9 SLIDE CENTER LOCK - VERTICAL PAGE 49

10 SLIDE CENTER LOCK - HORIZONTAL PAGE 49

11 STRIKERS
- STRIKER PAGE 48
- T&TI STRIKER PAGE 49

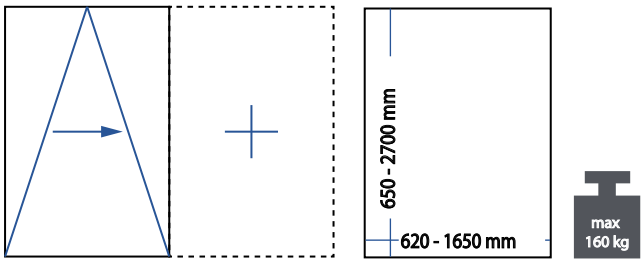

PROAL

* MAX. SRW / SRH RATIO = 1 : 2,5

* HKS 100 CHOOSE 4 / HKS 160 CHOOSE 5

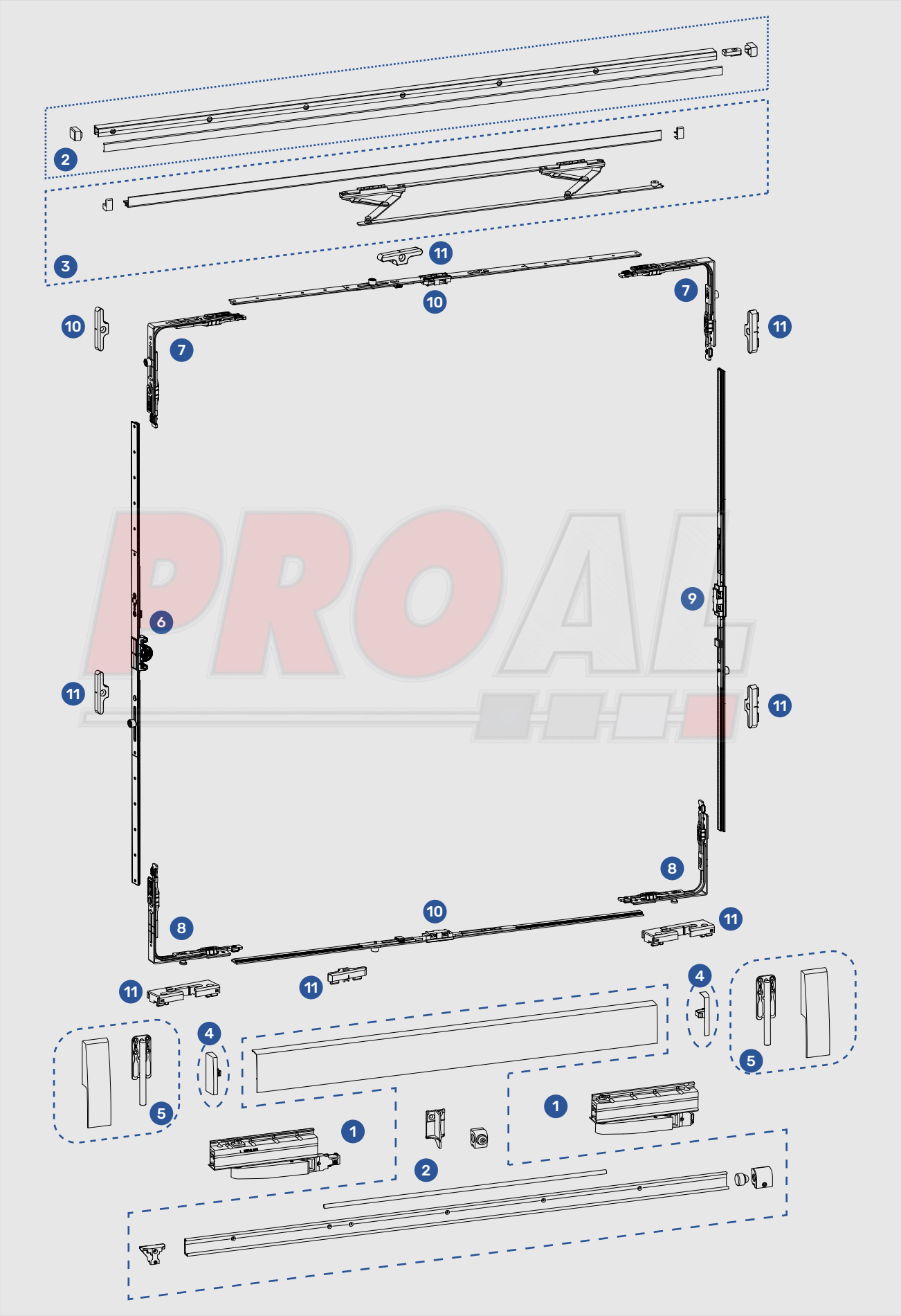
2
3
11
10
7
10
11
7
6
9
11
11
8
10
11
8
11
11
4
4
5
5
1
1
2

T&T ESPAGNOLETTE M

Centered / variable handle height

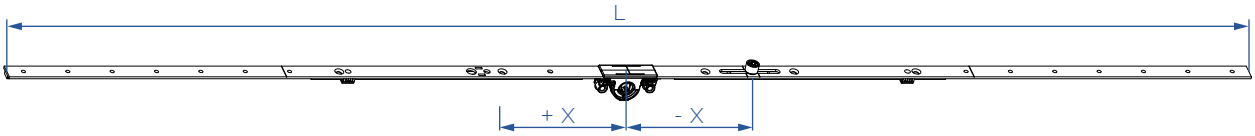

Backset 14,5 mm

SRH	HH	L	X	X			PACK.	MATERIAL
650 - 1000	300 - 500	720	-111	•	1	2	10	1088473
900 - 1400	450 - 700	1120	-111	•	1	5	10	1098964
1401 - 1800	701 - 900	1520	- 111	•	1	7	10	1098965
1601 - 2000	801 - 1000	1720	- 311	+ 309	2	8	10	1098966
2001 - 2400	1001 - 1200	2120	- 311	+ 309	2	10	10	1098967

SRH	HH	L	X	X	X	X			PACK.	MATERIAL
900 - 1400	450 - 700	1120	•	-211	+ 209	•	2	6	10	1098973
1401 - 1800	701 - 900	1520	•	-211	+ 209	•	2	8	10	1098974
1601 - 2000	801 - 1000	1720	•	- 311	+ 109	+ 559	3	9	10	1098975
2001 - 2400	1001 - 1200	2120	-631	- 311	+ 309	+ 629	4	12	10	1098976

SRH	HH	L	X	X			PACK.	MATERIAL
650 - 1000	300 - 500	720	-111	•	1	2	10	1101035
900 - 1400	450 - 700	1120	-111	•	1	5	10	1101036
1401 - 1800	701 - 900	1520	- 111	•	1	7	10	1101037
1601 - 2000	801 - 1000	1720	- 311	+ 309	2	8	10	1101038
2001 - 2400	1001 - 1200	2120	- 311	+ 309	2	10	10	1101039

SRH	HH	L	X	X	X	X			PACK.	MATERIAL
900 - 1400	450 - 700	1120	•	- 211	+ 209	•	2	6	10	1105851
1401 - 1800	701 - 900	1520	•	- 211	+ 209	•	2	8	10	1105852
1601 - 2000	801 - 1000	1720	•	- 311	+ 109	+ 559	3	9	10	1105853
2001 - 2400	1001 - 1200	2120	-631	- 311	+ 309	+ 629	4	12	10	1105854

Backset 7,5 mm

SRH	HH	L	X	X	MS			PACK.	MATERIAL
470-820 [1)]	210-410	540	•	•	•	•	•	10	1083123
600-1000 [1)]	300-500	720	-111	•	•	1	2	10	1083124
900-1400	450-700	1120	-111	•	+ 99,5	1	5	10	1083125
1401-1800	701-900	1520	- 111	•	+ 99,5	1	7	10	1083126
1601-2000	801-1000	1720	- 311	+ 309	- 121,5	2	8	10	1083127
2001-2400	1001-1200	2120	- 311	+ 309	- 121,5	2	10	10	1083128

* SRH 2401 - 2700 ADD EXTENSION 400 1102897

T&T ESPAGNOLETTE M - LARGER BACKSETS

Centered / variable handle height

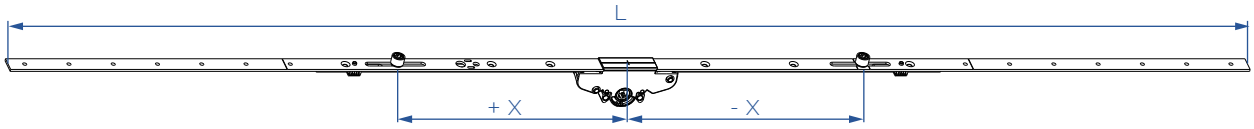

Backset 25 mm

SRH	HH	L	X	X	X	X			PACK.	MATERIAL
650 - 1000	300 - 500	720	•	•	-111	•	1	2	6	1104485
900 - 1400	450 - 700	1120	•	+209	-211	•	2	6	6	1104486
1401 - 1800	701 - 900	1520	•	+209	-211	•	2	8	6	1104487
1601 - 2000	801 - 1000	1720	+559	+109	-311	•	3	9	6	1104488
2001 - 2400	1001 - 1200	2120	+629	+ 309	-311	- 631	4	12	6	1104489

Backset 30 mm

SRH	HH	L	X	X	X	X			PACK.	MATERIAL
650 - 1000	300 - 500	720	•	•	-111	•	1	2	6	1107648
900 - 1400	450 - 700	1120	•	+209	-211	•	2	6	6	1107649
1401 - 1800	701 - 900	1520	•	+209	-211	•	2	8	6	1107650
1601 - 2000	801 - 1000	1720	+559	+109	-311	•	3	9	6	1107651
2001 - 2400	1001 - 1200	2120	+629	+ 309	-311	- 631	4	12	6	1107652

Backset 35 mm

SRH	HH	L	X	X	X	X			PACK.	MATERIAL
650 - 1000	300 - 500	720	•	•	-111	•	1	2	6	1107654
900 - 1400	450 - 700	1120	•	+209	-211	•	2	6	6	1107655
1401 - 1800	701 - 900	1520	•	+209	-211	•	2	8	6	1107656
1601 - 2000	801 - 1000	1720	+559	+109	-311	•	3	9	6	1107657
2001 - 2400	1001 - 1200	2120	+629	+ 309	-311	- 631	4	12	6	1107658

Backset 45 mm

SRH	HH	L	X	X	X	X			PACK.	MATERIAL
650 - 1000	300 - 500	720	•	•	-111	•	1	2	6	1104491
900 - 1400	450 - 700	1120	•	+209	-211	•	2	6	6	1104492
1401 - 1800	701 - 900	1520	•	+209	-211	•	2	8	6	1104493
1601 - 2000	801 - 1000	1720	+559	+109	-311	•	3	9	6	1104494
2001 - 2400	1001 - 1200	2120	+629	+ 309	-311	- 631	4	12	6	1104495

* SRH 2401 - 2700 ADD EXTENSION 400 1102897

T&T ESPAGNOLETTE M - LARGER BACKSETS + LOCKABLE

Centered / variable handle height

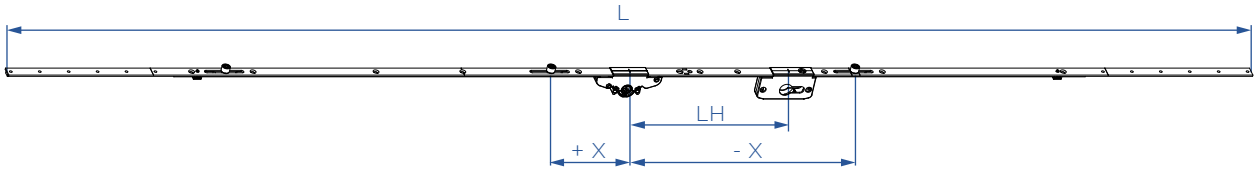

Backset 25 mm

SRH	HH	L	X	X	X	X	LH			PACK.	MATERIAL
1601 - 2000	801 - 1000	1720	+559	+109	-311	•	220	3	10	6	1104477

Backset 30 mm

SRH	HH	L	X	X	X	X	LH			PACK.	MATERIAL
1601 - 2000	801 - 1000	1720	+559	+109	-311	•	220	3	10	6	1107659

Backset 35 mm

SRH	HH	L	X	X	X	X	LH			PACK.	MATERIAL
1601 - 2000	801 - 1000	1720	+559	+109	-311	•	220	3	10	6	1107662

Backset 45 mm

SRH	HH	L	X	X	X	X	LH			PACK.	MATERIAL
1601 - 2000	801 - 1000	1720	+559	+109	-311	•	220	3	10	6	1104482

* SRH 2401 - 2700 ADD EXTENSION 400 1102897

T&T ESPAGNOLETTE KV

Fixed handle height

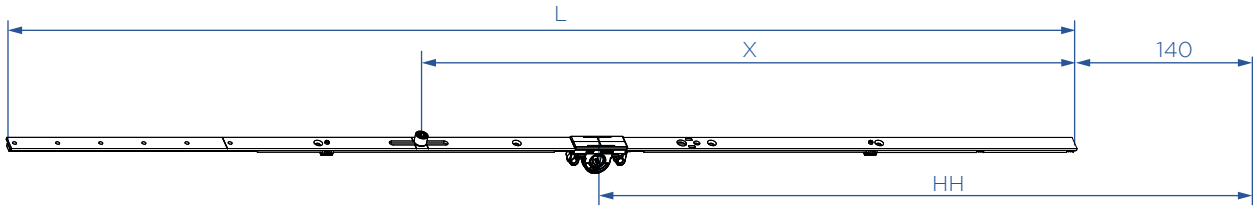

Backset 14,5 mm

SRH	HH	L	X	X			PACK.	MATERIAL
650 - 800	263	520	•	•	•	1	10	1115131
801 - 1000	413	720	•	•	•	3	10	1115132
801 - 1000	413	720	389	•	1	3	10	1115133
1001 - 1200	513	920	539	•	1	4	10	1115134
1201 - 1400	563	1120	539	•	1	6	10	1115135
1401 - 1600	563	1320	539	•	1	7	10	1115136
1601 - 1800	563	1520	539	•	1	8	10	1115137
1601 - 1800	1000	1520	539	•	1	8	10	1115167
1801 - 2000	1000	1720	1209	539	2	11	10	1115138
2001 - 2200	1000	1920	1209	539	2	12	10	1115139
2201 - 2400	1000	2120	1209	539	2	13	10	1115140

SRH	HH	L	X	X	MS			PACK.	MATERIAL
801–1000	413	720	389	•	145	1	3	10	1142916
1001–1200	513	920	539	•	244	1	4	10	1142919
1201–1400	563	1120	539	•	244	1	6	10	1142921
1401–1600	563	1320	539	•	244	1	7	10	1142922
1601–1800	563	1520	539	•	244	1	8	10	1142923
1601–1800	1000	1520	539	•	244	1	8	10	1142924
1801–2000	1000	1720	1209	539	977	2	11	10	1142925
2001–2200	1000	1920	1209	539	977	2	12	10	1142926
2201–2400	1000	2120	1209	539	977	2	13	10	1142927

* SRH 2401 - 2700 ADD EXTENSION 400 1102897

CORNER DRIVE

TYPE	DESCRIPTION	CAM			PACK.	MATERIAL
1	Corner drive	1 R	1	4	10	1103158
2	Corner drive	1 RS	1	4	10	1100983
3	Corner drive	2 R	2	4	10	1103159
4	Corner drive	2 RS	2	4	10	1100984

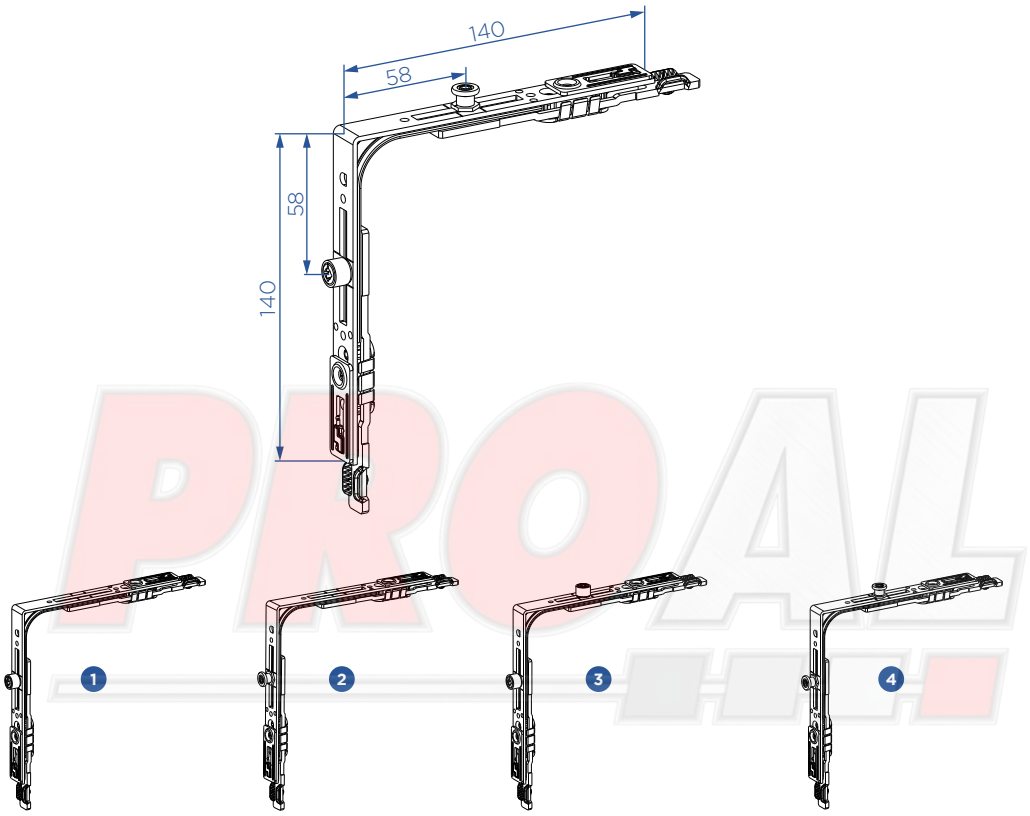

* HKS REQUIRES RS CAMS AT THE BOTTOM (TILT) - 2 PCS PER SASH
* SP REQUIRES RS CAM IN EACH CORNER (VENTILATION) - 4 PCS PER SASH

ESPAGNOLETTE EXTENSION

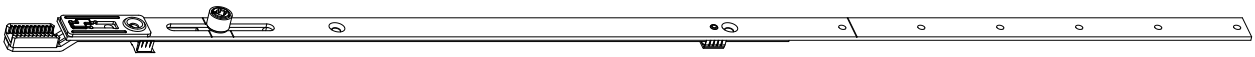

DESCRIPTION	A	L	X			PACK.	MATERIAL
400	200	400	79	3	1	10	1102897
600	200	600	79	4	1	10	1102898
800	200	800	79	5	1	10	1102899

* SRH 2401 - 2700 ADD EXTENSION 400 1102897

CENTER LOCK

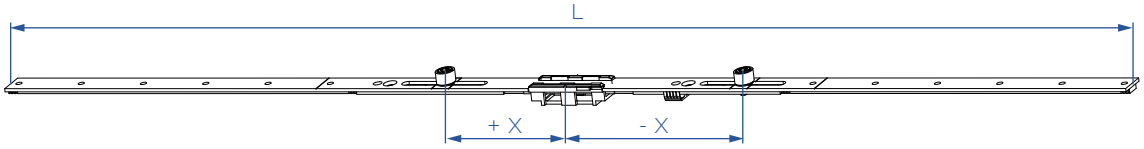

Vertical

SRH	L	X	X			PACK.	MATERIAL
650 - 1000	720	•	- 111	1	2	10	1095173
1001 - 1400	1120	•	- 111	1	5	10	1095174
1401 - 1800	1520	•	- 111	1	7	10	1095175
1801 - 2000	1720	+ 309	- 311	2	8	10	1095176
2001 - 2400	2120	+ 309	- 311	2	10	10	1095177

SRH	L	X	X			PACK.	MATERIAL
650 - 1000	720	•	- 111	1	2	10	1143006
1001 - 1400	1120	•	- 111	1	5	10	1143007
1401 - 1800	1520	•	- 111	1	7	10	1143008
1401 - 1800	1520	+ 309	- 311	2	7	10	1146736
1801 - 2000	1720	+ 309	- 311	2	8	10	1143009
2001 - 2400	2120	+ 309	- 311	2	10	10	1143010

Horizontal

SRW	L	X			PACK.	MATERIAL
620 - 1000	720	- 111	1	2	10	1095173
1001 - 1400	1120	- 111	1	5	10	1095174
1401 - 1650	1520	- 111	1	7	10	1095175

SRH	L	X	X			PACK.	MATERIAL
620 - 1000	720	•	- 111	1	2	10	1143006
1001 - 1400	1120	•	- 111	1	5	10	1143007
1401 - 1650	1520	•	- 111	1	7	10	1143008
1401 - 1650	1520	+ 309	- 311	2	7	10	1146736

* SRH 2401 - 2700 ADD EXTENSION 400 1102897

STRIKER

STRIKER	PACK.	MATERIAL
ALUPLAST 2000/ 3000/ 4000/ 5000/ 6000/ 8000	300	1083204
BRUGMANN BluEvolution	300	1083202
DECEUNINCK 2500/ 2800	300	1151423
EUROCELL Modus	300	1107664
GEALAN 7000/ 8000 /S9000	300	1083203
INOUTIC Prestige/ Arcade	300	1083206
INOUTIC Elegante	300	1131423
LINIAR	300	1097948
PIMAPEN Carisma S-7000	300	1131423
PROFINE KBE 76/ 70AD	300	1083205
PROFINE KÖMMERLING Eurofutur Clasic/ Elegance/ 88 Plus/ C70/ 76 MD	300	1083205
PROFINE TROCAL 70.A5 AD/ 70.M5 MD/ 76 AD/ 76 MD	300	1083205
REHAU Geneo/ Synego/ S706/ S730	300	1083204
REHAU Artevo	300	1151366
ROLOPLAST 7000/ 7500/ 7500 3D	300	1083204
SALAMANDER 3D/ Streamline 76	300	1083204
SCHÜCO Corona AD/ CT70 AD/ CT70 MD/ S182 MD	300	1083204
SELECTA Advance 70	300	1083205
VEKA Matrix/ Softline/ Softline 82/ Topline	300	1083202
WEISS WP3000/ WP4000/ WP5000	300	1083204
WHS Halo System 10	300	1083204

PROAL

T&TI STRIKER

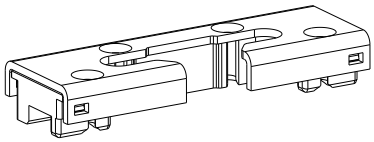

T&TI STRIKER	POS.	PACK.	MATERIAL
ALUPLAST 2000/ 3000	L R	100	1132231 1132232
ALUPLAST 4000/ 5000/ 6000/ 8000	L R	100	1132233 1132234
BRUGMANN BluEvolution	L R	100	1132249 1132250
DECEUNINCK 2500/ 2800	L R	100	1135570 1135571
EUROCELL Modus	L R	100	1132235 1132236
GEALAN 7000/ 8000 /S9000	L R	100	1132235 1132236
INOUTIC Prestige/ Arcade	L R	100	1132245 1132246
INOUTIC Elegante	L R	100	1135570 1135571
LINIAR	L R	100	1132249 1132250
PIMAPEN Carisma S-7000	L R	100	1135570 1135571
PROFINE KBE 76/ 70AD	L R	100	1132235 1132236
PROFINE KÖMMERLING Eurofutur Clasic/ Elegance/ 88 Plus	L R	100	1132239 1132240
PROFINE KÖMMERLING C70/ 76 MD	L R	100	1132235 1132236
PROFINE TROCAL 70.A5 AD/ 70.M5 MD/ 76 AD/ 76 MD	L R	100	1132235 1132236
REHAU S706/ S730	L R	100	1132241 1132242
REHAU Geneo/ Synego	L R	100	1139277 1139278
REHAU Artevo	L R	100	1151364 1151363
ROLOPLAST 7000/ 7500/ 7500 3D	L R	100	1132243 1132244
SALAMANDER 3D/ Streamline 76	L R	100	1132243 1132244
SCHÜCO Corona AD/ CT70 AD/ CT70 MD/ S182 MD	L R	100	1132231 1132232
SELECTA Advance 70	L R	100	1132235 1132236
VEKA Matrix/ Softline/ Softline 82/ Topline	L R	100	1132249 1132250
WEISS WP3000/ WP4000/ WP5000	L R	100	1132231 1132232
WHS Halo System 10	L R	100	1132233 1132234

PROAL

SECURITY STRIKER

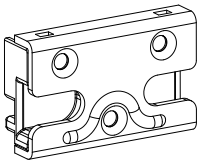

SECURITY STRIKER	PACK.	MATERIAL
ALUPLAST 2000/ 3000	100	1083219
ALUPLAST 4000/ 5000/ 6000/ 8000	100	1083216
BRUGMANN BluEvolution	100	1083214
DECEUNINCK 2500/ 2800	100	1135572
EUROCELL Modus	100	1083217
GEALAN 7000/ 8000/ S9000	100	1083217
INOUTIC Prestige/ Arcade	100	1083218
INOUTIC Elegante	100	1135572
LINIAR	100	1083214
PIMAPEN Carisma S-7000	100	1135572
PROFINE KBE 76/ 70AD	100	1083217
PROFINE KÖMMERLING Eurofutur Clasic/ Elegance/ 88 Plus	100	1098310
PROFINE KÖMMERLING C70/ 76 MD	100	1083217
PROFINE TROCAL 70.A5 AD/ 70.M5 MD/ 76 AD/ 76 MD	100	1083217
REHAU S706/ S730	100	1089625
REHAU Geneo/ Synego	100	1139279
REHAU Artevo	100	1151365
ROLOPLAST 7000/ 7500/ 7500 3D	100	1098609
SALAMANDER 3D/ Streamline 76	100	1098609
SCHÜCO Corona AD/ CT70 AD/ CT70 MD/ S182 MD	100	1083219
SELECTA Advance 70	100	1083217
VEKA Matrix/ Softline/ Softline 82/ Topline	100	1083214
WEISS WP3000/ WP4000/ WP5000	100	1083219
WHS Halo System 10	100	1083216

SET OF RAILS

Tilt & Slide - HKS

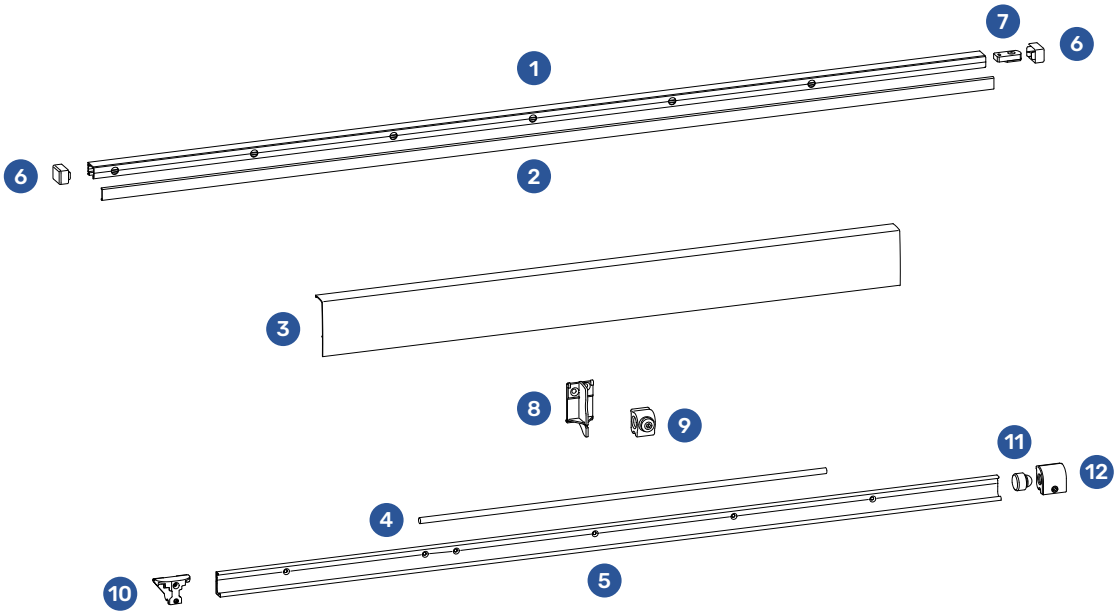

SRW	L	COLOR	MATERIAL
620 - 900	1930	WHITE	1092851
		SILVER	1092850
		BROWN	1092852
		MIDDLE BRONZE	1105246
901 - 1050	2230	WHITE	1092855
		SILVER	1092854
		BROWN	1092856
		MIDDLE BRONZE	1105249
1051 - 1250	2630	WHITE	1092859
		SILVER	1092858
		BROWN	1092860
		MIDDLE BRONZE	1105267
1251 - 1450*	3030	WHITE	1092863
		SILVER	1092862
		BROWN	1092864
		MIDDLE BRONZE	1105268
1451 - 1650 [1]	3430	WHITE	1092867
		SILVER	1092866
		BROWN	1092868
		MIDDLE BRONZE	1105269

TYPE	DESCRIPTION	PACK
1	GUIDE TRACK	1
2	SCREW COVER PROFILE	1
3	COVER PROFILE	1
4	CONNECTING ROD	1
5	BOTTOM TRACK	1
6	COVER CAP FOR GUIDE TRACK	2 (L&R)
7	BUFFER - TOP	1
8	COVER FILLET SUPPORT	1
9	SUPPORT BLOCK	1
10	GUIDE BLOCK	1
11	RUBBER MUSHROOM PART	1
12	BUFFER - BOTTOM	1

[1] SRW = 1251 - 1650 mm & SRH = 2350 - 2700 mm, MUST USE HKS 160 kg SET

STAY SYSTEM

Tilt & Slide - HKS

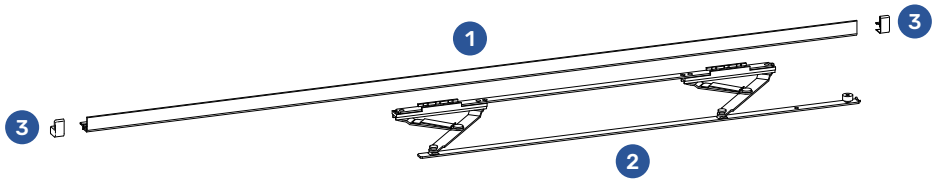

SRW	L	COLOR	MATERIAL
620 - 900	900	WHITE	1092875
		SILVER	1092874
		BROWN	1092876
		MIDDLE BRONZE	1105271
901 - 1250	1250	WHITE	1092879
		SILVER	1092878
		BROWN	1092880
		MIDDLE BRONZE	1105272
1251 - 1650 [1]	1650	WHITE	1092883
		SILVER	1092882
		BROWN	1092884
		MIDDLE BRONZE	1105273

TYPE	DESCRIPTION	PACK
1	STAY CONNECTING PROFILE	1
2	STAY ARM	1
3	COVER CAP FOR STAY CON. PROFILE	2 (L&R)

[1] SRW = 1251 - 1650 mm & SRH = 2350 - 2700 mm, MUST USE HKS 160 kg SET

PROAL

SET OF BOGIES

Tilt & Slide - HKS

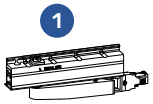

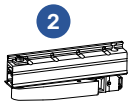

* PICTURE SHOWS LEFT ORIENTATION

DESCRIPTION	POS	MATERIAL
BOGIES SET 100 KG	R	1083332
	L	1083331

TYPE	DESCRIPTION	PACK
1	MASTER BOGIE	1
2	SLAVE BOGIE	1

* SRW = 1251 - 1650 mm & SRH = 2350 - 2700 mm, MUST USE HKS 160 kg SET
* BOGIES COME IN SET OF 1x MASTER & 1x SLAVE BOGIE

HKS 160 SET

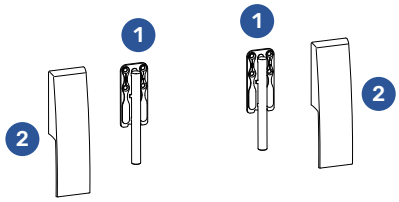

DESCRIPTION	COLOR	MATERIAL
SET 160 KG (COVER CAP + SUPPORT ARM)	WHITE	1092887
	SILVER	1092886
	BROWN	1092888
	MIDDLE BRONZE	1105274

TYPE	DESCRIPTION	PACK
1	SUPPORT ARM	2 (L&R)
2	COVER CAP - BOTTOM	2 (L&R)

* SRW = 1251 - 1650 mm & SRH = 2350 - 2700 mm, MUST USE HKS 160 kg SET
* HKS 160 SET COMES IN SET OF L and R SUPPORT ARM & L and R SUPPORT ARM COVER CAP

COVER CAPS HKS 100

DESCRIPTION	COLOR	MATERIAL
COVER CAP 100 KG - BOTTOM	WHITE	1092897
	SILVER	1092896
	BROWN	1092898
	MIDDLE BRONZE	1105277

TYPE	DESCRIPTION	PACK
1	COVER CAP 100 KG - BOTTOM	2 (L&R)

* WHEN USING HKS 160 SET, COVER CAPS HKS 100 ARE NOT NEEDED
* COVER CAPS COME IN SET OF L and R COVER CAP

Window handles

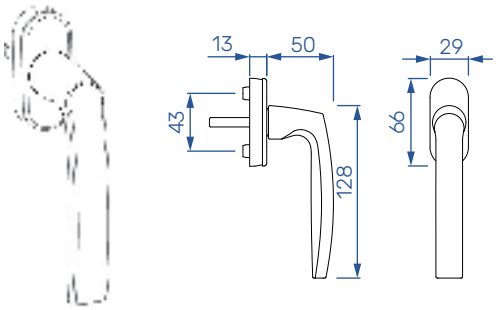

1

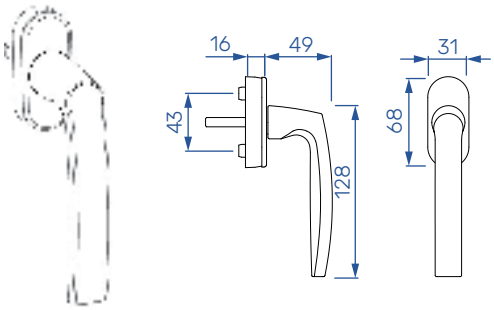

2

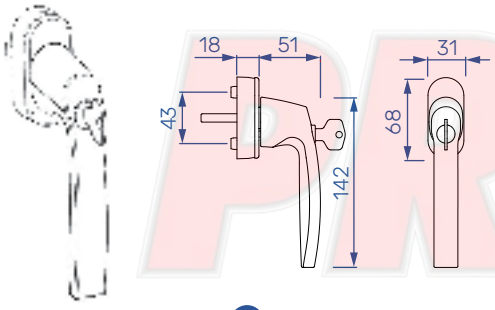

3

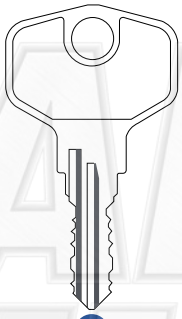

4

TYPE	DESCRIPTION	L	COLOR	PACK	MATERIAL
1	STANDARD HANDLE	32	F4 - dark bronze	20	1053207
		37	F1 - silver	20	1053212
		37	F4 - dark bronze	20	1053213
		37	F9 - titan	20	1053214
		37	RAL 9010 - white	20	1053215
		37	RAL 8707 - brown	20	1053216
		42	F1 - silver	20	1100839
		42	RAL 9010 - white	20	1058068
		42	RAL 8707 - brown	20	1058069
2	SECUSTIC HANDLE	37	F1 - silver	10	1053222
		37	F4 - dark bronze	10	1053223
		37	F9 - titan	10	1053224
		37	RAL 9010 - white	10	1053225
		37	RAL 8707 - brown	10	1053226
3	SECUSTIC HANDLE WITH SAFETY LOCK	37	F1 - silver	10	1053232
		37	F4 - dark bronze	10	1053235
		37	F9 - titan	10	1053236
		37	RAL 9010 - white	10	1053237
		37	RAL 8707 - brown	10	1053238
4	SPARE KEY FOR HANDLE	/	/	1	1119964

Slide handles

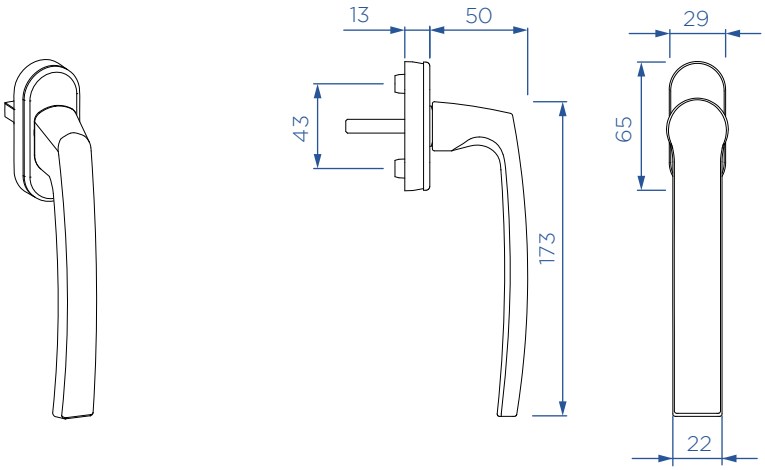

DESCRIPTION	L	COLOR	PACK	MATERIAL
SLIDE HANDLE	35	F9010 - white	60	1066771
	35	F8707 - dark brown	60	1066773
	42	F9010 - white	60	1107644
	42	F1 - silver	60	1123358

SCREWS FOR FIXING HARDWARE COMPONENTS

TYPE	DESCRIPTION	SIZE	MATERIAL
1	SCREW	4,2 x 25 mm	1134209
2	SCREW	4,2 x 35 mm	1134210

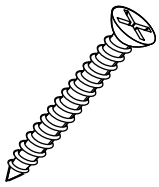

LOCKING CAM ADJUSTMENT INSTRUCTIONS

Rolling cam - R

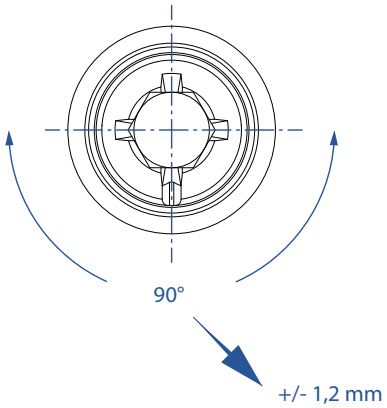

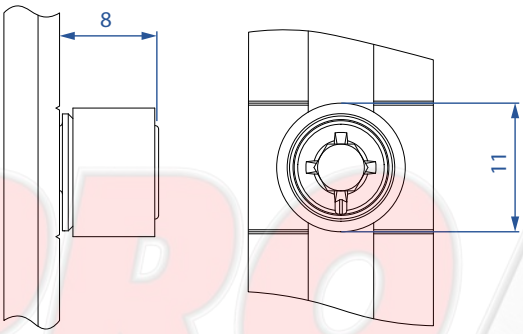

R CAM ADJUSTMENT TOOL

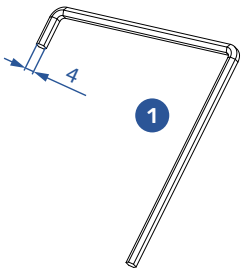

TYPE	DESCRIPTION	SIZE	MATERIAL
1	HEX KEY	4 mm	1095750

LOCKING CAM ADJUSTMENT INSTRUCTIONS

Rolling security cam - RS

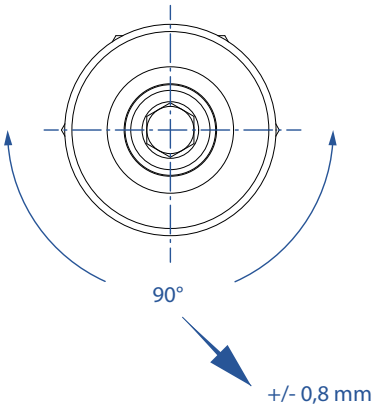

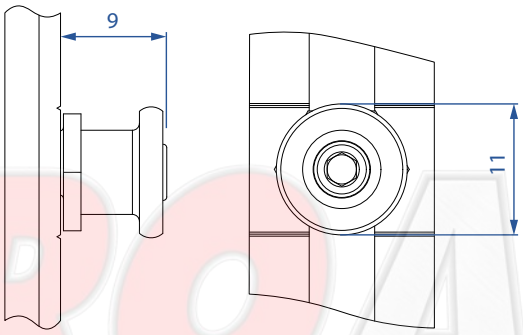

RS CAM ADJUSTMENT TOOL

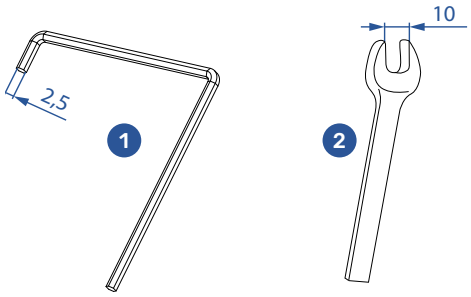

TYPE	DESCRIPTION	SIZE	MATERIAL
1	HEX KEY	2,5 mm	1148205
2	SPANNER	10 mm	/

Types

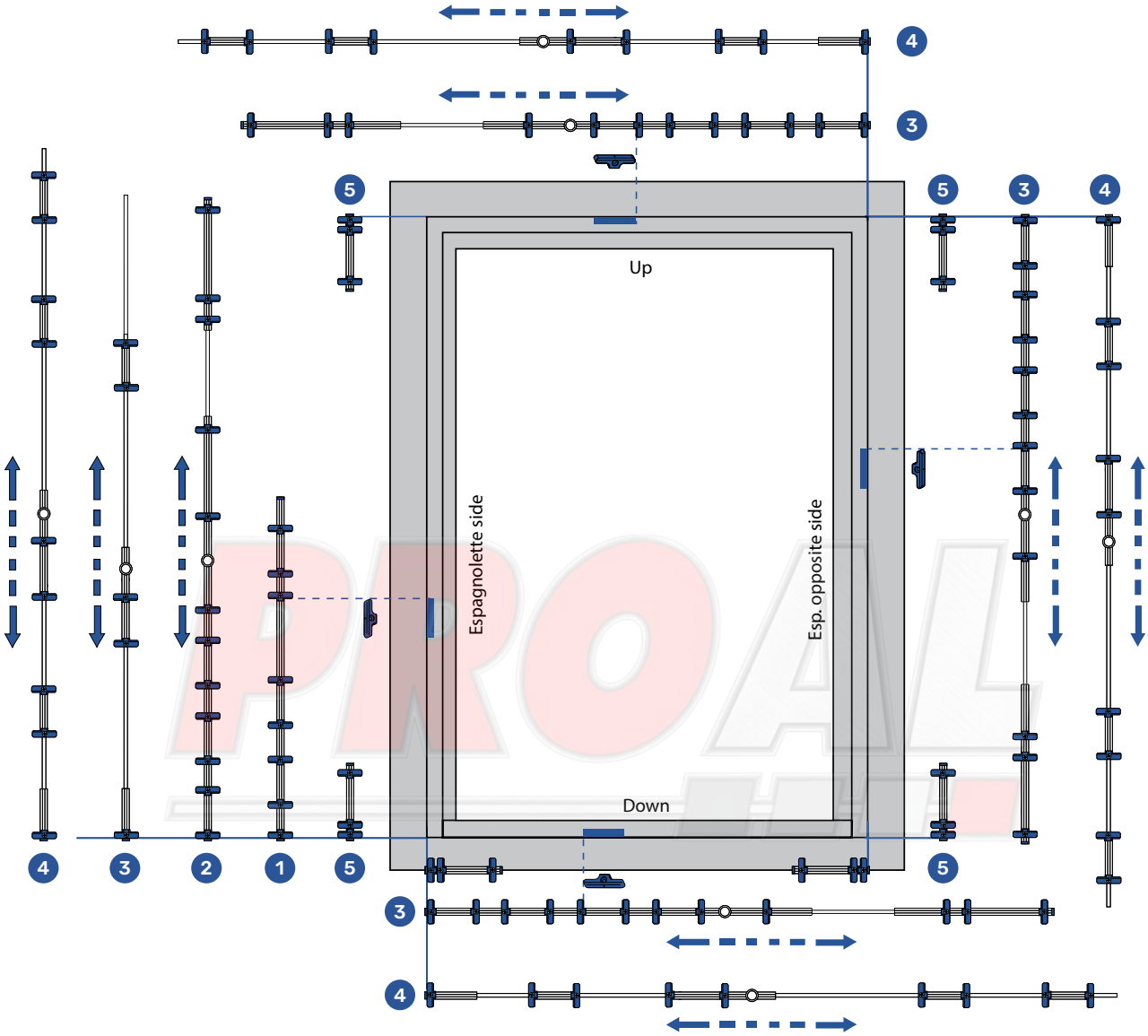

TYPE	DESCRIPTION	NOTE	MATERIAL
1	Constant handle height espagnolette	SRH < 1600	1103566
2	Constant handle height espagnolette - telescopic jig	SRH > 1601	1103570
3	Centered handle height espagnolette - telescopic jig	SRH < 1600	1103572
3a	TYPE 3 - with additional cam	SRH < 1600	1103573
4	Centered handle height espagnolette - telescopic jig	SRH > 1601	1103574
4a	TYPE 4 - with additional cam	SRH > 1601	1103575
5	SP striker jig	/	1108013
6	TILT striker JIG	/	1108014

Instructions for use

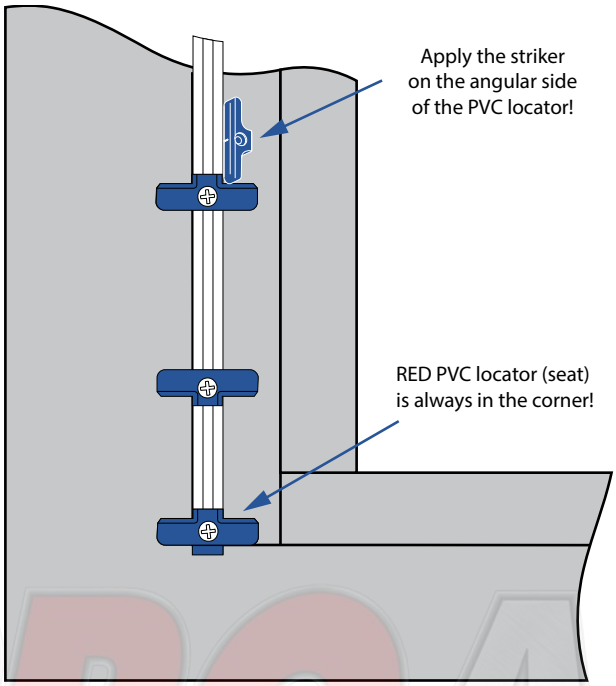

CAM scheme

COLOR of PVC LOCATOR	DESCRIPTION	NOTES
RED	Seat - NO locking cam	No striker
YELLOW	Corner drive locking cam	Located next to the seat
YELLOW	Espagnolette & center lock locking cam	/
GREEN	N / A	/
BLUE	N / A	/
BROWN	N / A	/

TOP & BOTTOM RAIL JIG - HKS

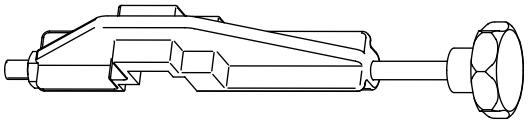

DESCRIPTION	PACK	PACK
HKS & SP TOP AND BOTTOM RAIL JIG	1	1105239

Window-handle drilling

GEAR-CASE SPROCKET AND LUGS´ DRILL HOLE

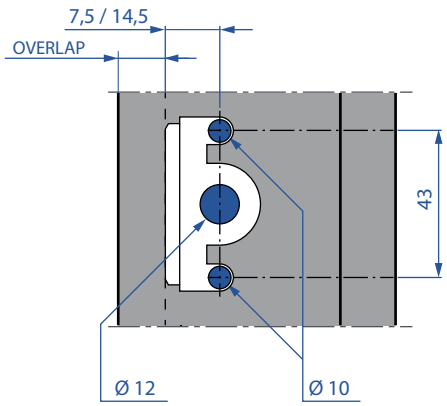

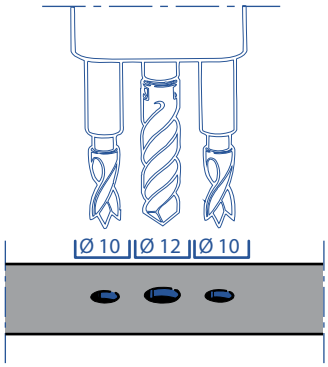

Gear-case routing

ESPAGNOLETTE GEAR-CASING

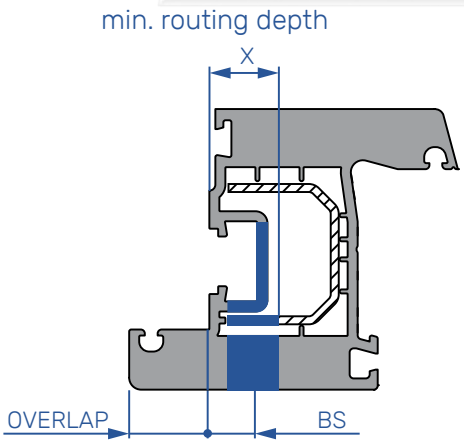

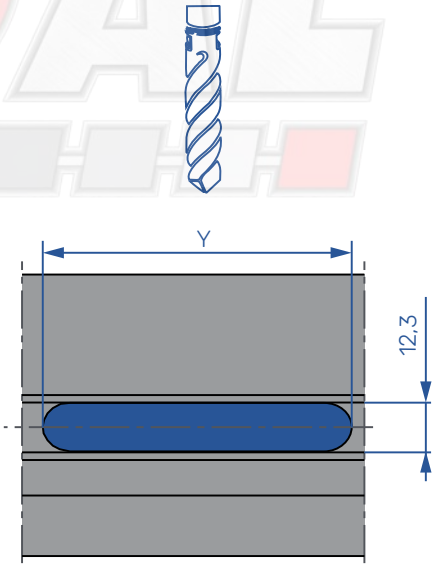

BS	X
7,5	20
14,5	27

BS	Y
7,5	34
14,5	64

Lock-case drilling

ESPAGNOLETTE LOCK-CASING

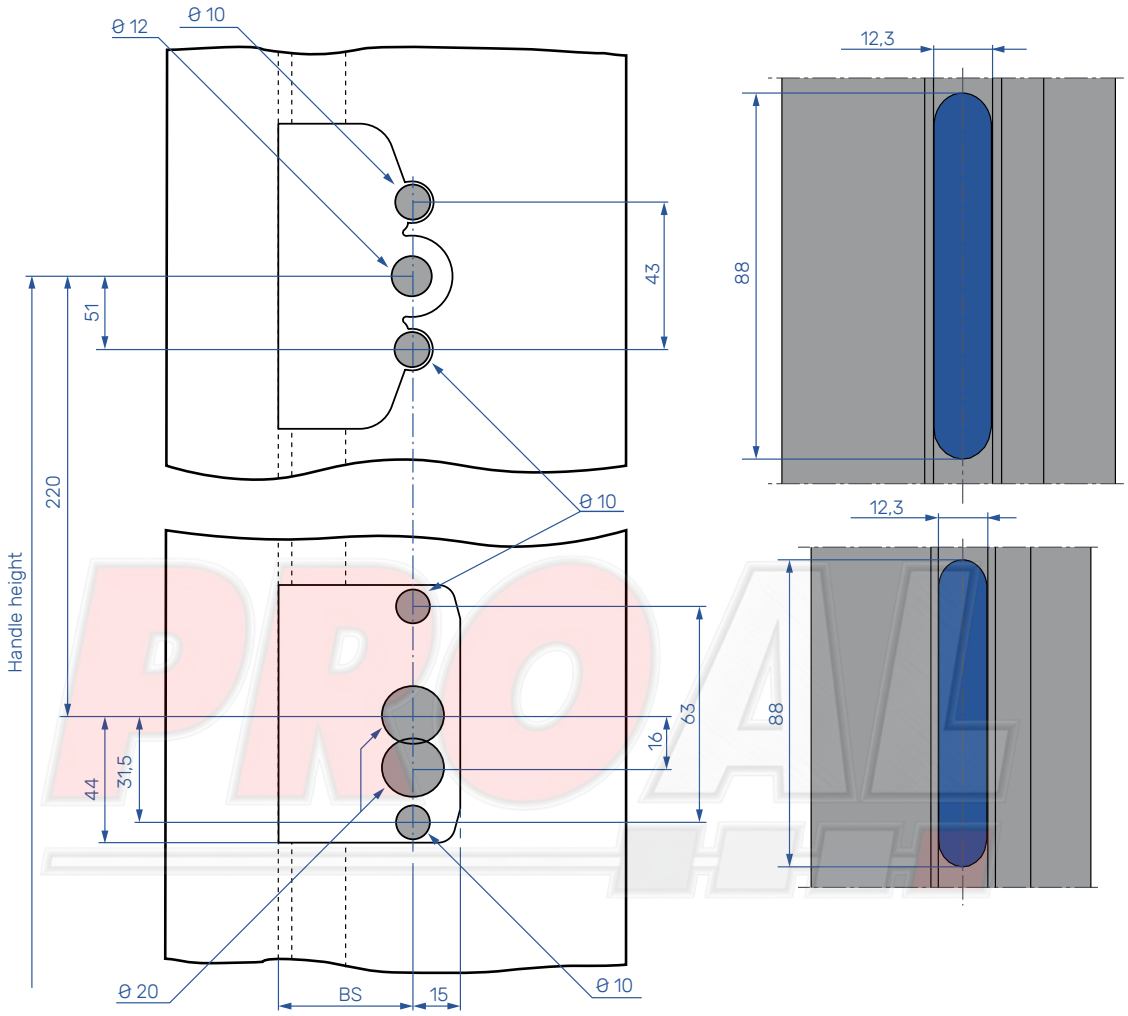

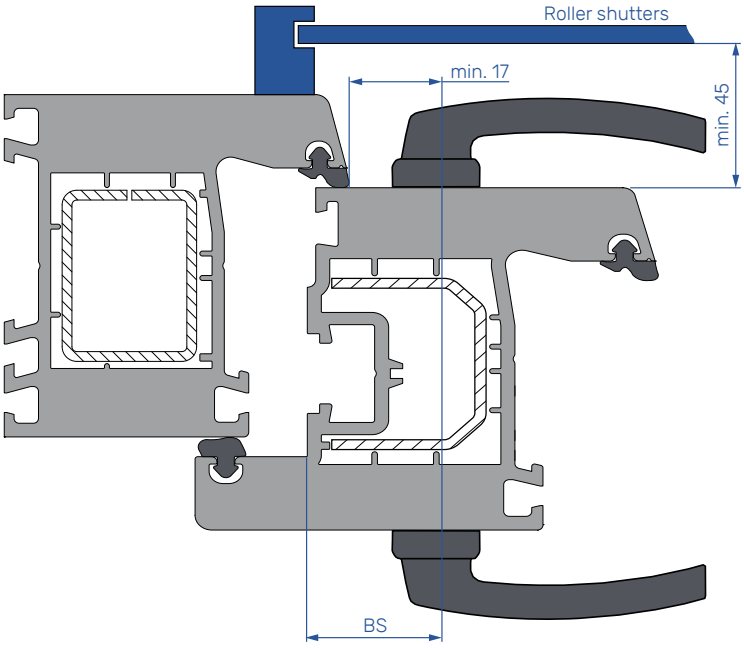

BS = 25, 30, 35 and 45 mm

SASH HARDWARE INSTALLATION INSTRUCTIONS

Tilt & Slide - HKS

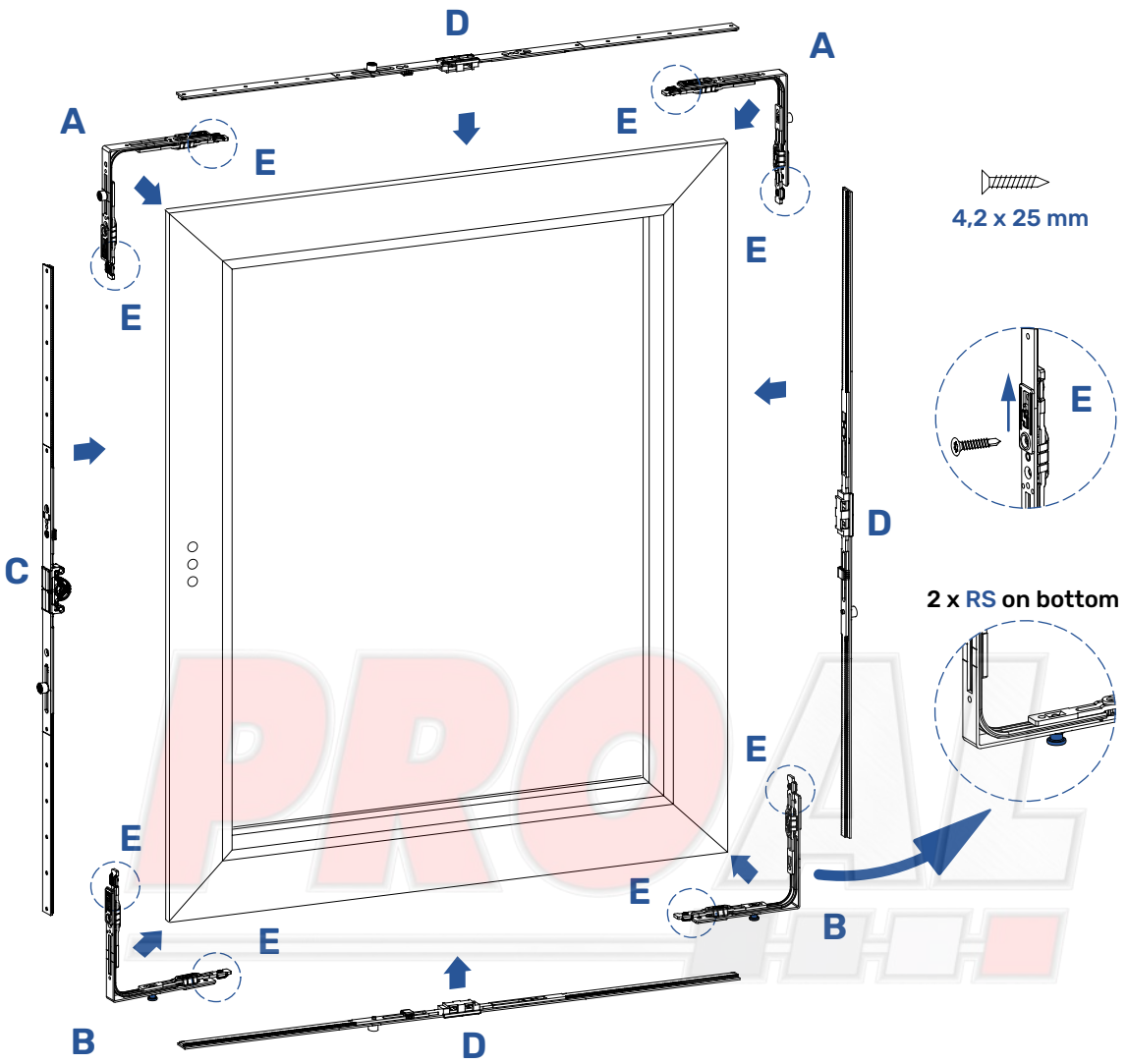

1 Install 2 corner drives on top (A) and 2 corner drives on bottom (B) with RS cam. Bottom corner drives must have at least one RS cam each, for tilt.

2 Shorten the espagnolette (C) and cental locks (D) according to the rebate dimensions of the sash.

3 Install the shortened espagnolette (C) and center locks (D).

4 Move the sliders (E) on corner drives, to lock the hardware in place.

5 Fix the hardware to the sash with 4,2 x 25 mm screws.

PROAL

FRAME HARDWARE INSTALLATION INSTRUCTIONS

Mounting of bogies

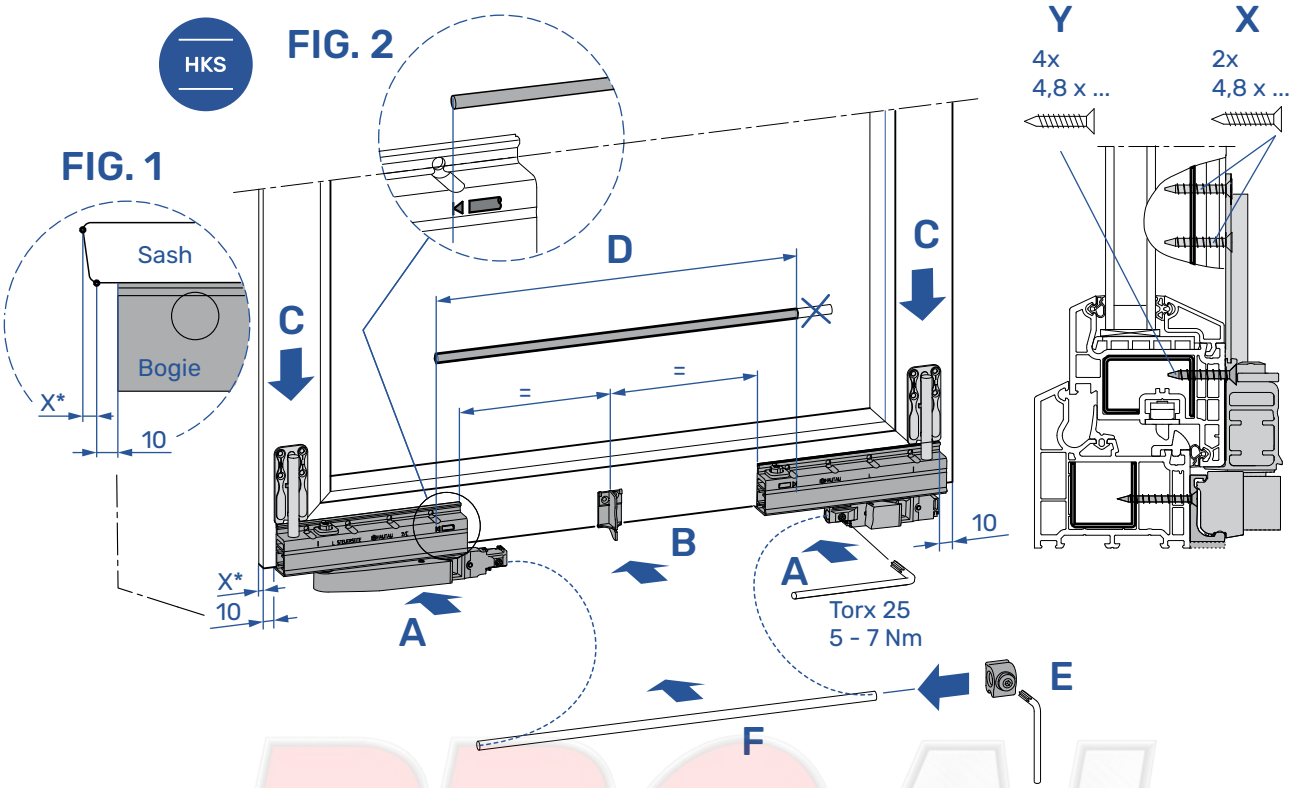

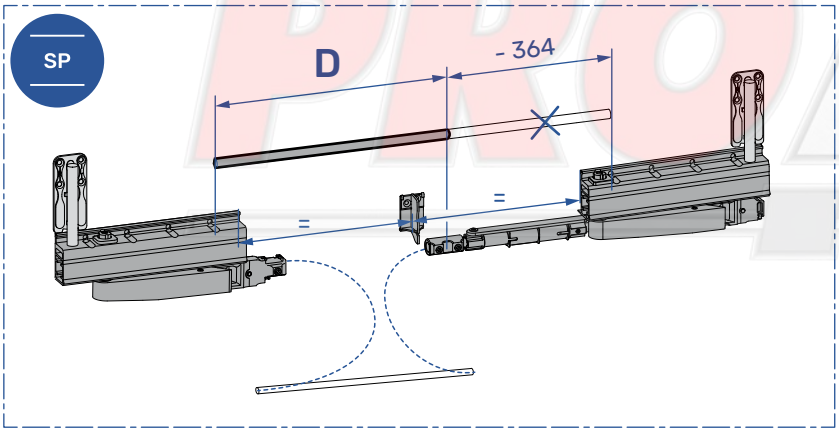

WARNING!
The power storage unit is under pressure. Never open or bend it or apply any other type of force. Otherwise, the result could be bodily injuries from suddenly ejected parts.

1. Install and fix the bogies (A) with screws. Ensure the flush position by keeping the 10 mm distance from the outer sash edges (FIG. 1).
2. Fix cover fillet support (B) in the middle of bogies. For SRW > 1450 mm, install 2 fillet supports equally between bogies.
3. For HKS 160 insert the support arms (C) and fix it with screws.
4. Cut the connecting track (D) to size according to the marks on bogies (FIG. 2).
5. For SRW > 1450 mm move the support block (E) into the middle of the connecting rod (D) and tighten the Torx screw.
6. Install connecting rod in bogies (F) and tighten the Torx screws.

Parallel alignment of bogies

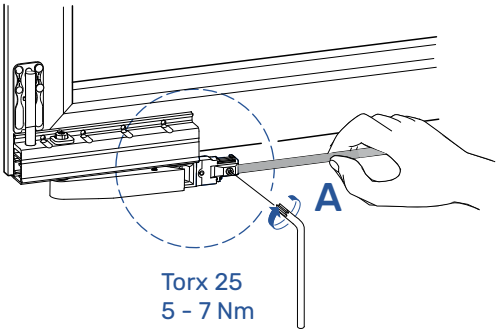

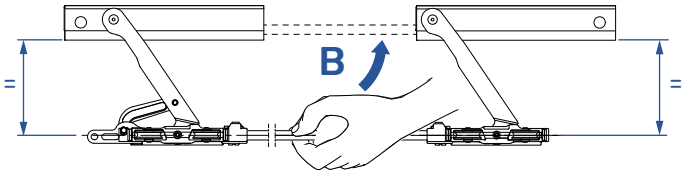

1 Grab the connecting rod (A) and bring it into position ''close'' (B).

2 Tighten the connecting rod at the master bogie.

3 Now, both bogies should be in parallel position. Tighten also the slave bogie.

PROAL

FRAME HARDWARE INSTALLATION INSTRUCTIONS

Mounting of guide & bottom track and stay system

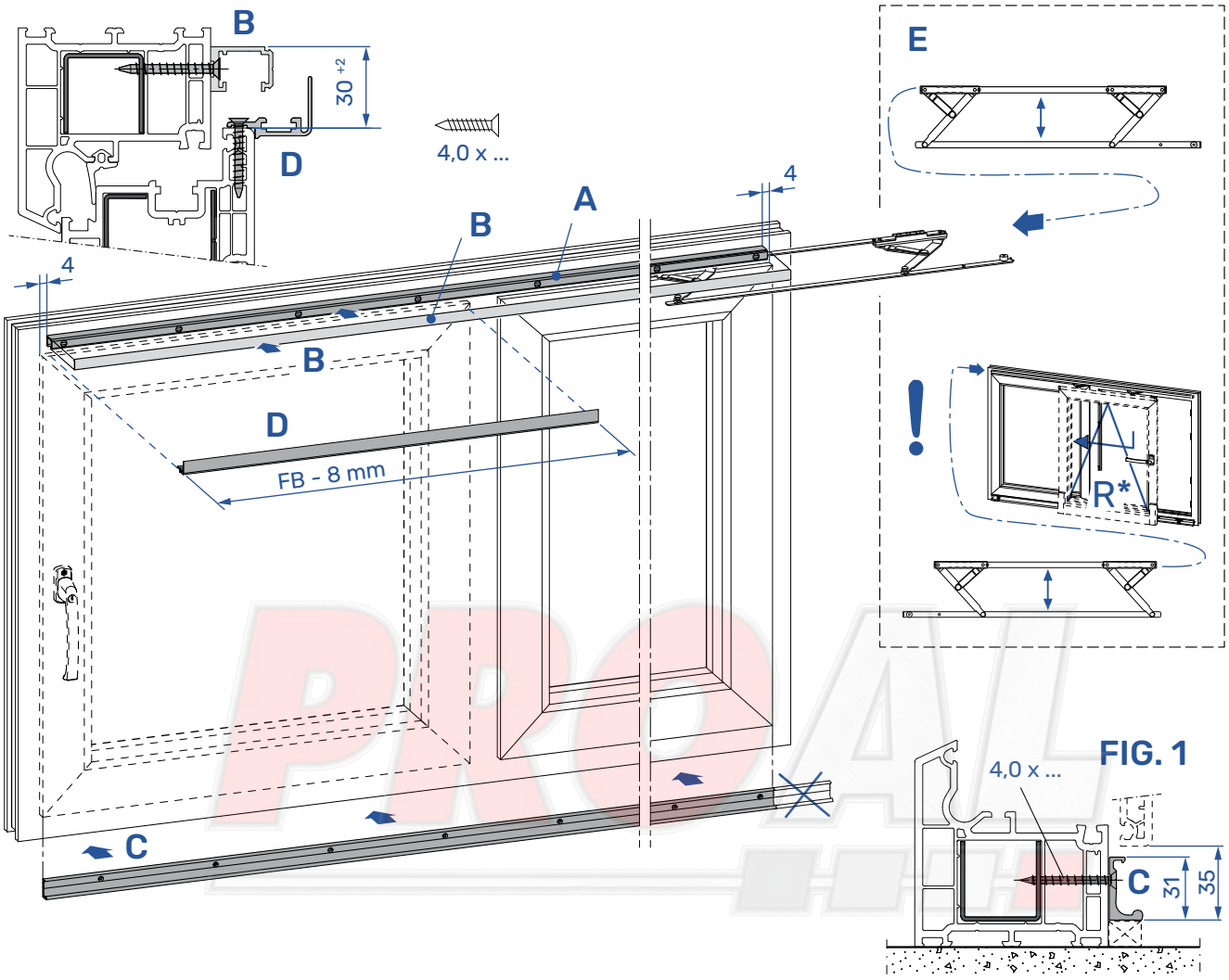

1 Cut the guide track (A) to the correct dimension - distance between outer edges of sliding and fixed sash, minus 8 mm. For correct position, use the montage jig 1105239. Fix the guide track (A) with **flathead** screws.

2 Shorten the cover profile (B) according to the size of the guide track (A) and clip it on the guide track (A).

3 Cut the bottom track (C) to the correct dimension - distance between outer edges of sliding and fixed sash. For correct position, use the montage jig 1105239. Fix the bottom track (C) with **flathead** screws.

4 Cut the stay connecting profile (D) to the width of outer edge of sliding sash minus 8 mm. Fix it on the top of the sash in the middle, with screws.

5 Open the stay system (E) and push it into the guide track (A).

FRAME HARDWARE INSTALLATION INSTRUCTIONS

Hanging sash

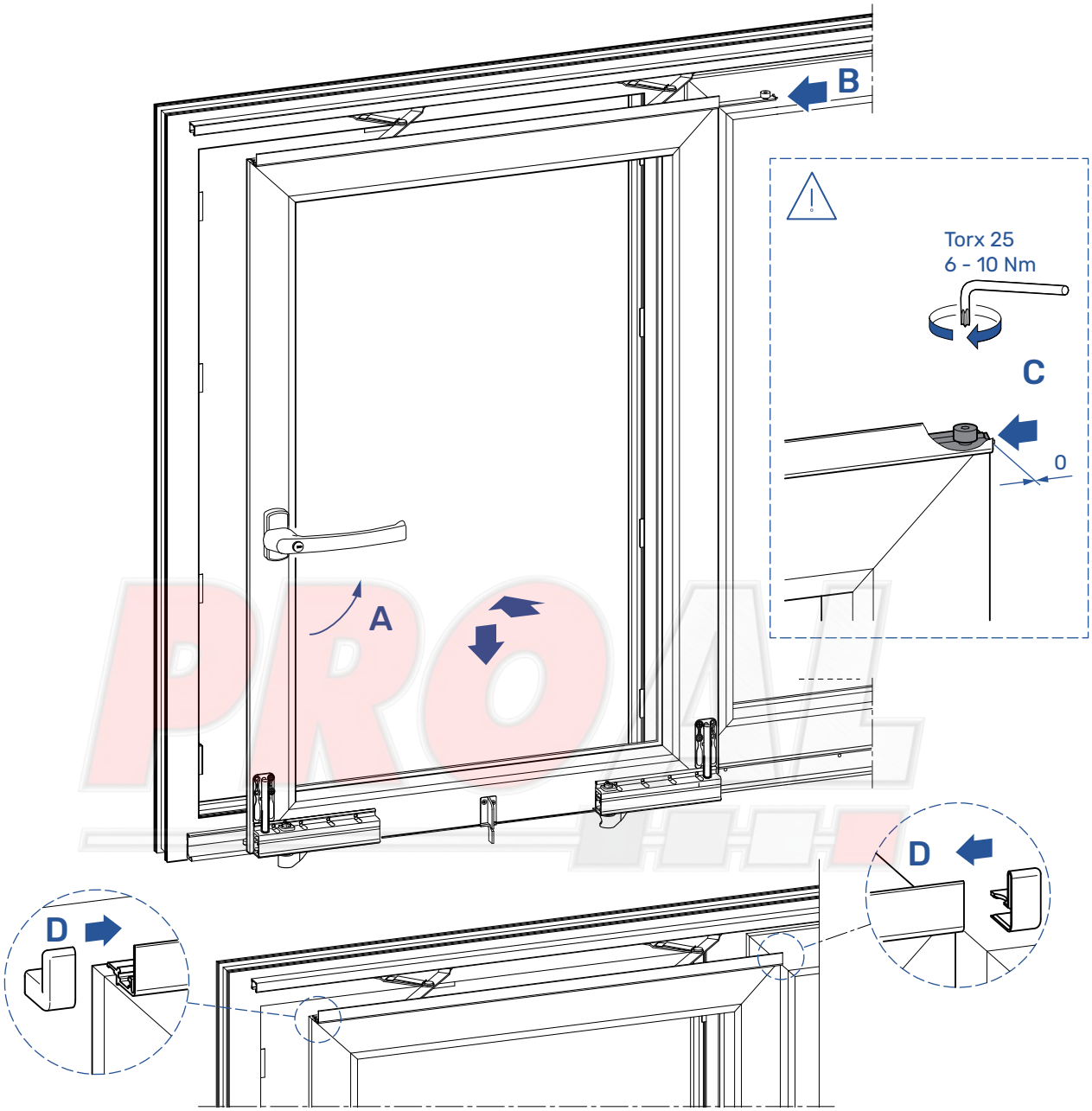

1 Bring handle into slide position (A). Lift the sash slightly in oblique position and place it together with bogie rollers on front edge of bottom track.

2 Push stay system (B) into stay connecting profile. Align the stay system into flush position (C) with the connecting profile. After that, thighten the screw. The screw must be positive fitted into the hole of the stay connecting profile!

3 Attach cover caps (D) on ends of stay connecting profile.

FRAME HARDWARE INSTALLATION INSTRUCTIONS

Installation of guide block and sash alignment

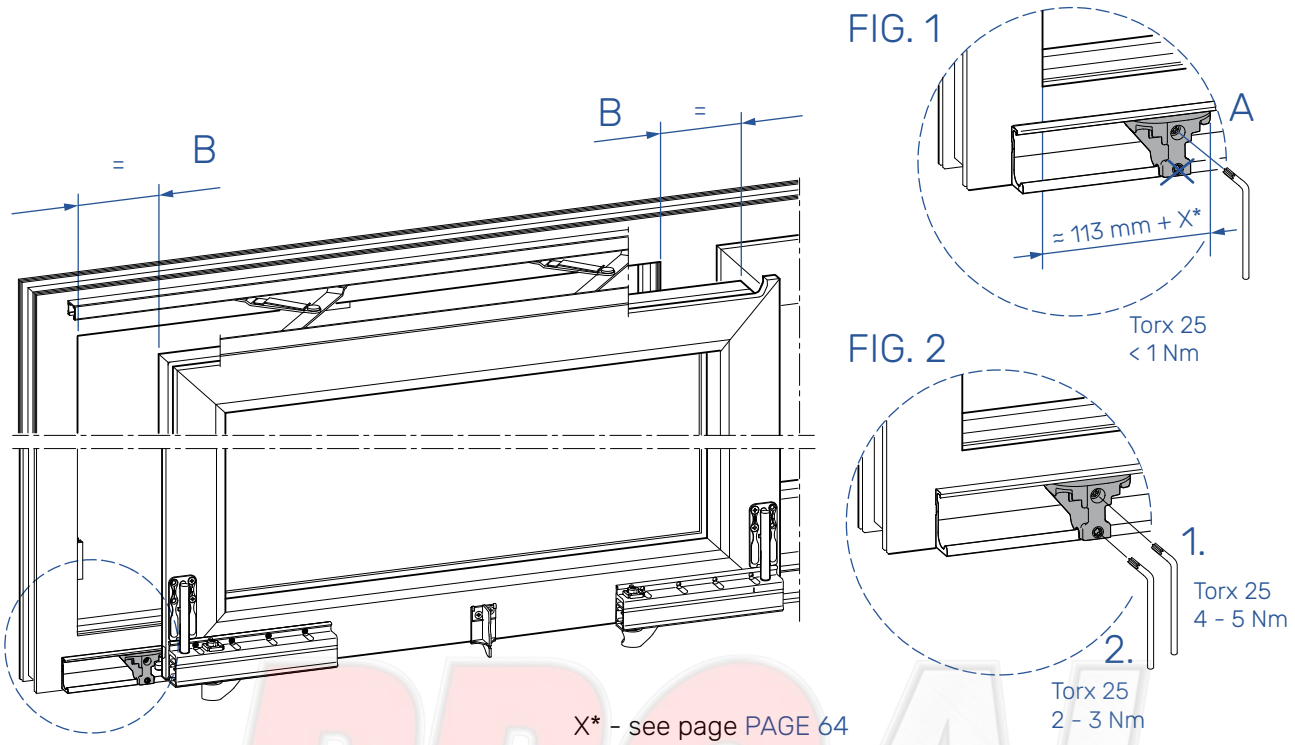

X* - see page PAGE 64

1 Set guide block (A) on handle side at a distance of approx. 113 mm + X* from the inner edge of the frame (FIG.1). Tighten the guide block slightly using the upper screw.

2 Put the sash into tilt position and check fittings cavity (B) on both sides (12 mm). Reset guide block, if necessary.

3 Tight the screws on the guide block (FIG.2).

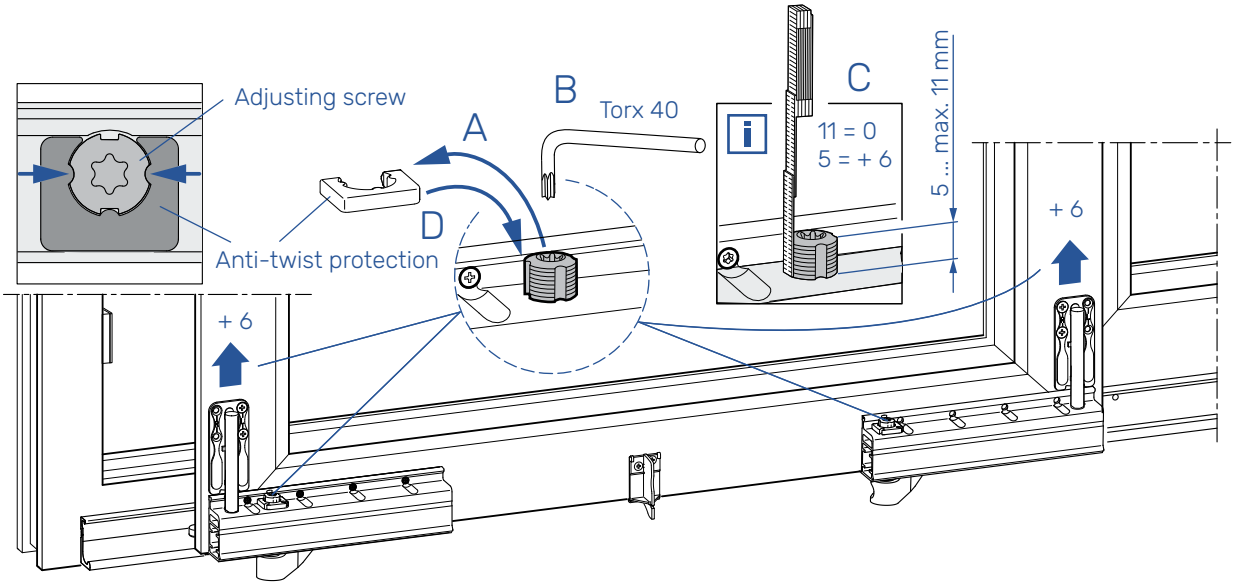

1 Check fittings cavity top and bottom on both sides (not shown). If necessary, align the sash as follows.

2 Remove anti-twist protections (A).

3 Lift bogies (B) by means of adjusting screws in order to align sash. The adjusting screws are allowed to be turned out max. 11 mm (C). Do not overdo it!

4 Put anti-twist protections on adjusting screws (D); at first, correct orientation of adjusting screws, if necessary.

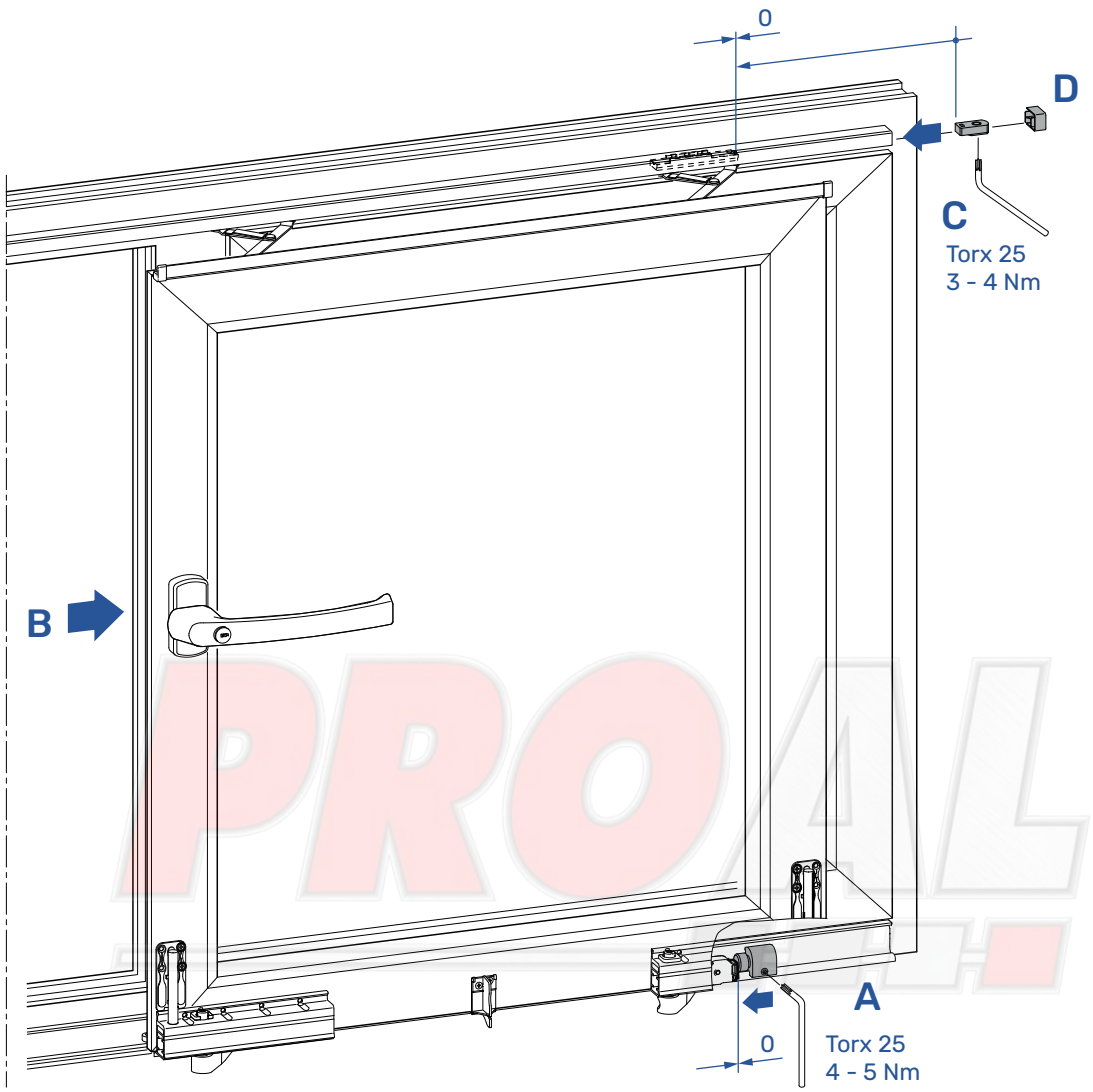

1 Screw bottom buffer (A) with attached rubber in required position on bottom track with Torx 25.

2 Move the sash (B) right to the buffer.

3 Insert top buffer (C) into guide track (until stay system) and tighten it firmly with Torx 25.

4 Attach cover caps (D) on ends of the guide track.

FRAME HARDWARE INSTALLATION INSTRUCTIONS

Bogie safety cover and support arm cover installation

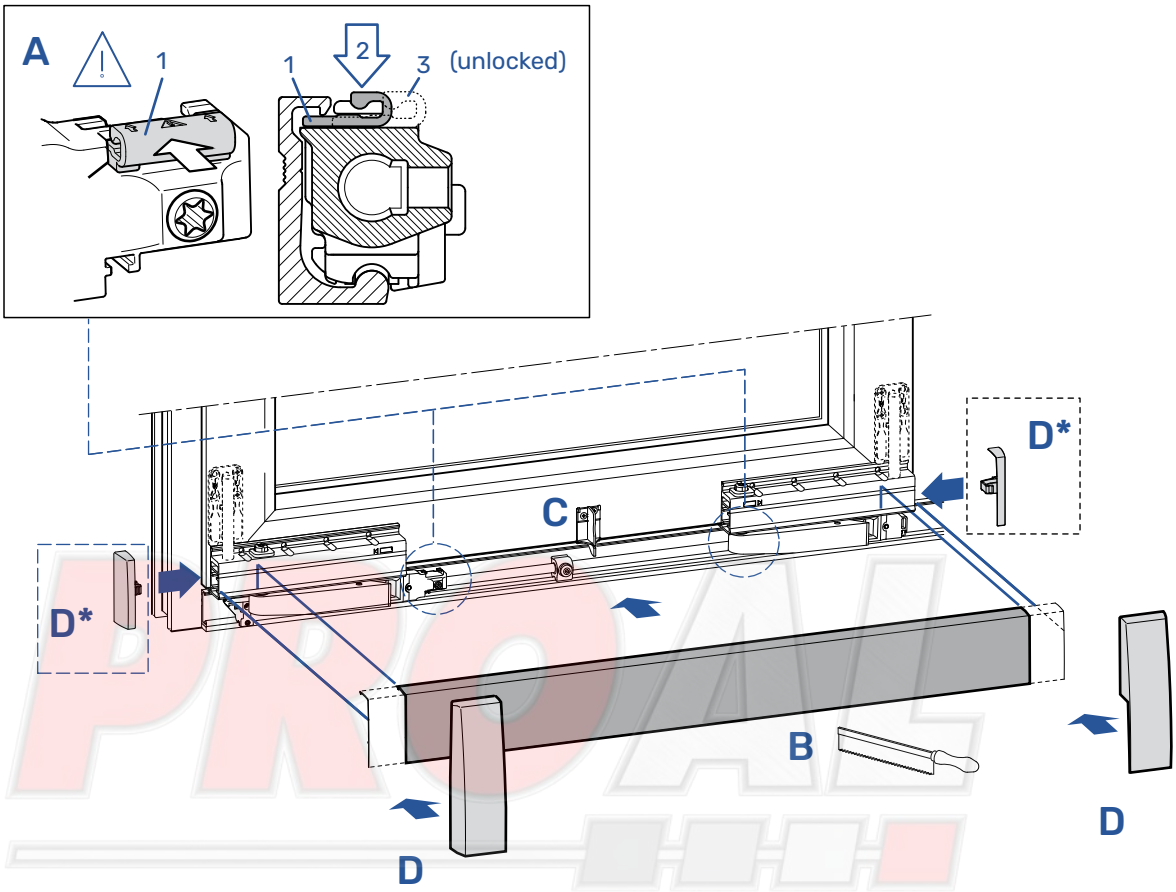

1 Move bogie safety device (1) of both bogies backwards until they engage in position as shown (2). Operating sliding window musn't have safety device disengaged (3). (A)

2 Cut cover profile (B) to size according to bogie marks.

3 Align cover profile (B) according to bogie marks and clip it on the bogies as well as on the cover fillet support(s) (C).

4 Clip cover caps (D*) to cover bogies (HKS 100) or clip cover caps (D) to cover bogies with support arms (HKS 160 and SP).

MAINTENANCE INSTRUCTIONS

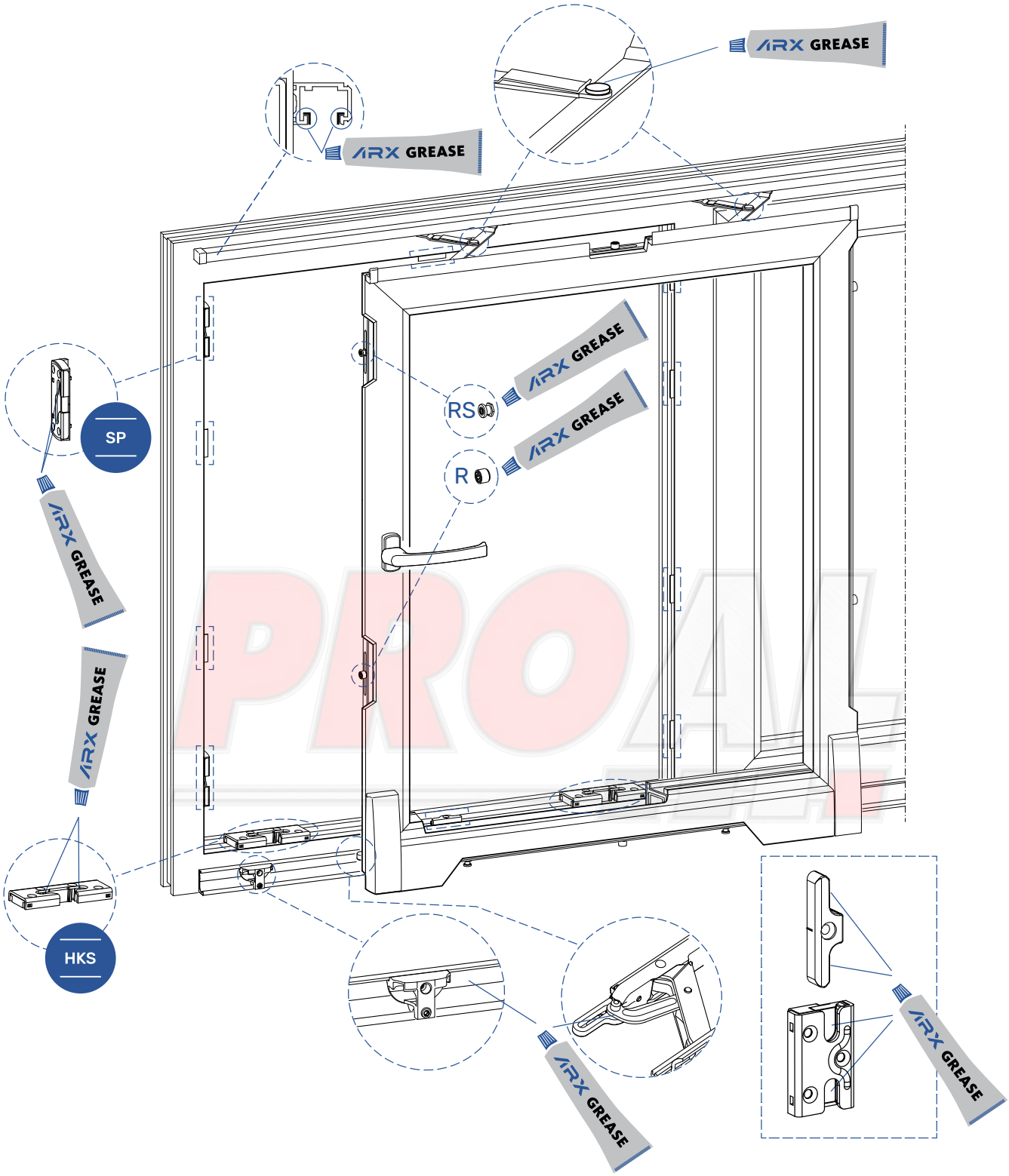

Regular greasing and oiling of operation-relevant components in the sash and frame is recommended at least once a year. In case of frequent use as in schools, hotels the oiling is recommended once in six months.

Acid free and non–resinous grease and/or oil from a specialized dealer must be used.

DESCRIPTION	MATERIAL
ARX - HIGH QUALITY HARDWARE GREASE	1055144

ARX
The Hardware.

HS
Lift and Slide

Basic schemes
Product portfolio

HS 330 - LIFT AND SLIDE BASIC SCHEME

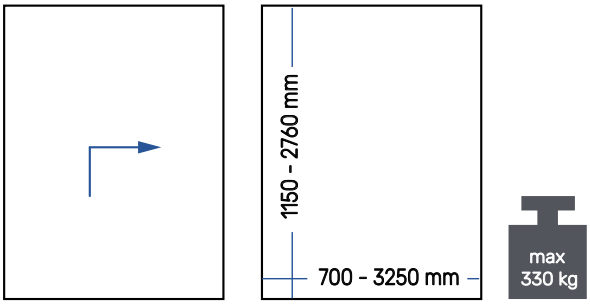

1 ESPAGNOLETTE BS 37,5

DESCRIPTION	NOTE	MATERIAL
1700		1149783
2200		1149785
2400		1149786
2700		1149787

2 SET OB BOGIES	300KG	1150005
2.1 SET OB BOGIES	400KG	1149788

3 BRACKET ROUND

DESCRIPTION	NOTE	MATERIAL
750		1149776
1500		1149778
2500		1149780

4 ADDITIONAL PARTS

DESCRIPTION	NOTE	MATERIAL
ALUPLAST BLACK	PVC	1149796
ALUPLAST WHITE	PVC	1149774
SALAMANDER WHITE	PVC	1156221
ELVIAL WHITE	ALU	1156222
ALUMINKO WHITE	ALU	1156223
ETEM WHITE	ALU	1156224

5 HANDLE INNER

DESCRIPTION	NOTE	MATERIAL
WHITE RAL 9016		1149801
BLACK RAL 9005		1149802
ANTHRACIT R7016		1149803

6 EXTERNAL LUG

DESCRIPTION	NOTE	MATERIAL
WHITE RAL9016		1149798
BLACK RAL9005		1149799
ANTRACIT RAL7016		1149800

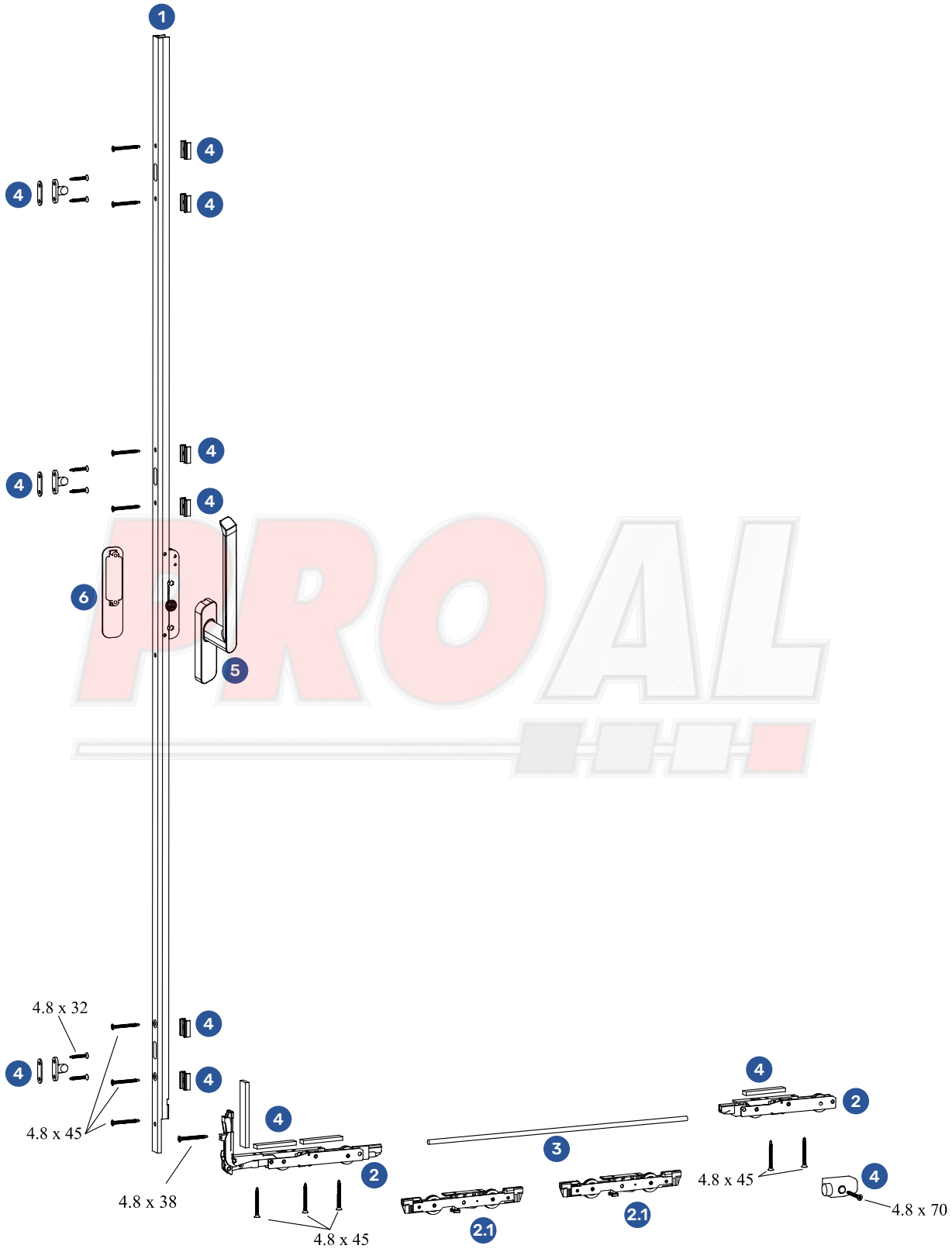
1
4
4
4
4
4
4
6
5
4.8 x 32
4
4
4
4.8 x 45
4.8 x 38
4
2
4.8 x 45
2.1
3
2.1
4
2
4.8 x 45
4
4.8 x 70

PROAL

PASS
Practical Agile Sliding System

Basic schemes
Pruposed guideline
Product portfolio
Detailed information

HIGH-QUALITY, DURABLE, SIMPLE

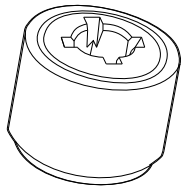

R cam

R cams incorporate a regulatory function which allows installer or user to optimize the window compression by +/- 0,8 mm, thereby improving the sealing properties of windows and balcony doors. Moreover, the R cams provide smoother operation to window users who only need to apply a minimum force in order to operate the handle.

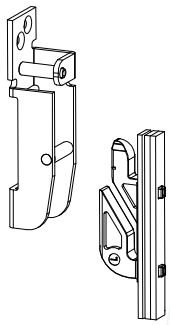

Hooks

Hook's brilliant design for closing and gasket compression improves sealing properties of windows and balcony doors. They also allow the window or door to be in one of 3 stages - open position, ventilation position and closed position.

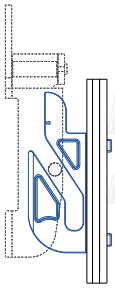

Night ventilation

When the striker pins begin to roll on the hooks, release the handle in a horizontal position. That way the hook won't be full engaged with the striker, but rather half engaged. That way the opening between the sash and the frame will measure 5 mm and it will allow for the air to circulate and ventilate the inside of your home.

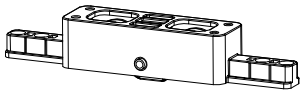

Max. sash weight up to 150 kg

Each window or door contains two PASS bogies, which are made from zamac, which bring additional rigidity and strength to the bogies in comparison with plastic.

PROAL

Symbols

In the part describing the Retract & Slide systems, different symbols, diagrams and tables are used in order to provide a clear picture and demonstration of the hardware application. The meanings are as follows:

Retract and slide

Rebate sash height

Rebate sash width

Handle height

NV Night vent

Length / dimension

Warning

max. 100 kg Max. sash mass

Material number

Orientation / postiton

Packaging

Hardware shortening

Abbreviation	Description	Units
SRH	SASH REBATE HEIGHT	mm
SRW	SASH REBATE WIDTH	mm
HH	HANDLE HEIGHT	mm
BS	BACKSET	mm
M	MAX. SASH MASS	kg
SRH : SRW	MAX. RATIO BETWEEN SRH AND SRW	/

SASH ARRANGEMENT

SCHEME A

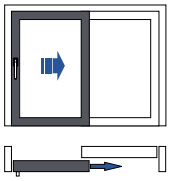

DIRECTION OF OPENING

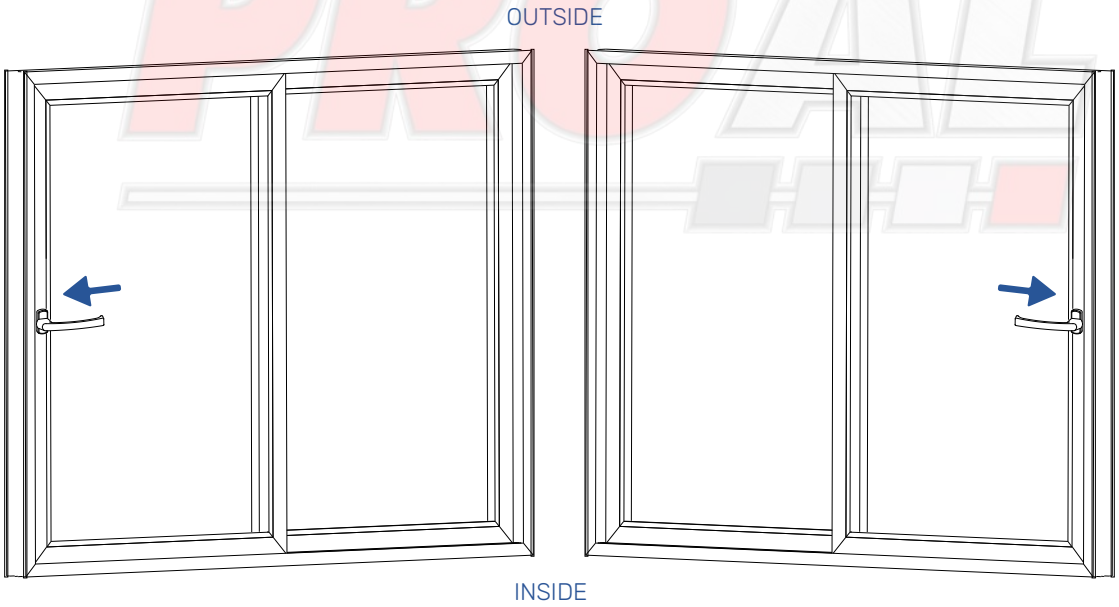

DIN EN 12519 - Right

ARX - Left direction

DIN EN 12519 - Left

ARX - Right direction

PASS SYSTEM OPENING

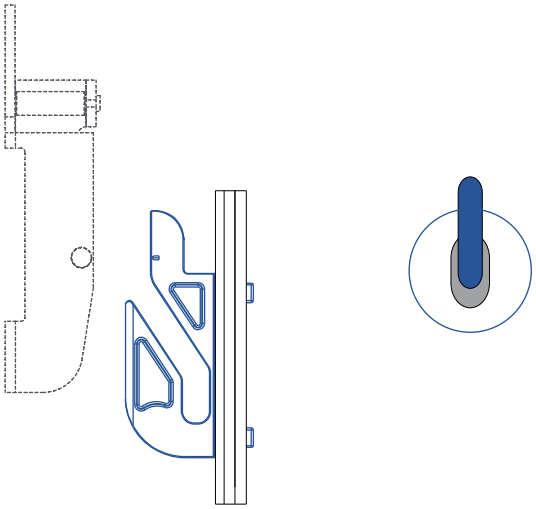

OPEN POSITION

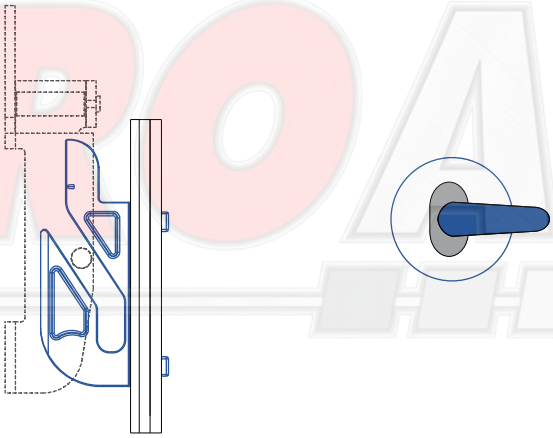

VENTILATION POSITION

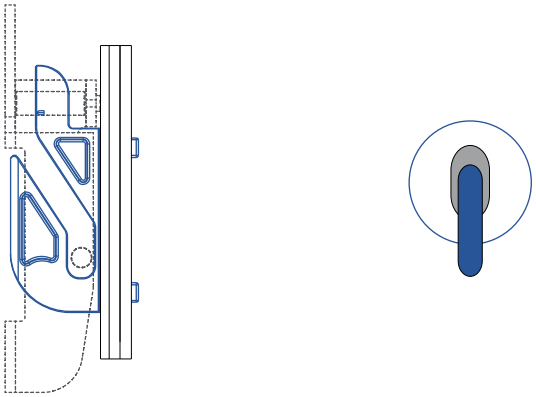

CLOSED POSITION

APPLICATION DIAGRAM

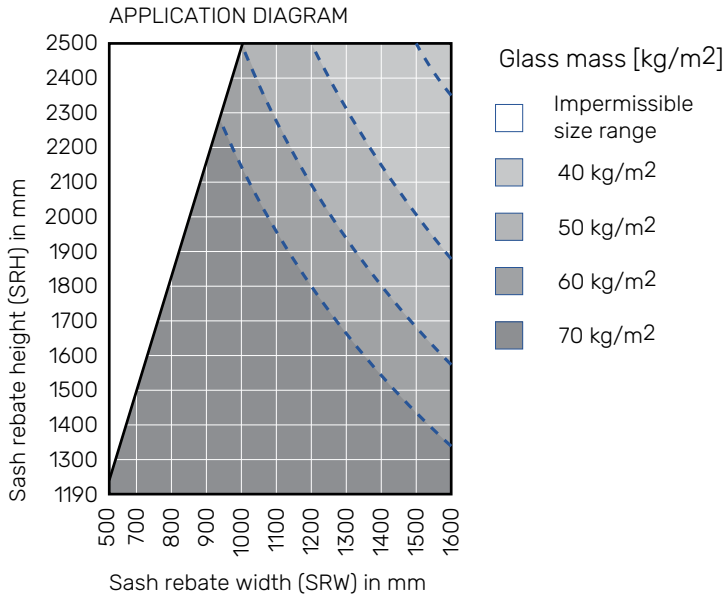

SRH	1190 - 2500
SRW	500 - 1600
M	150
max. SRW : SRH	1 : 2,5

Profile dimensioning - PROFINE Premislide

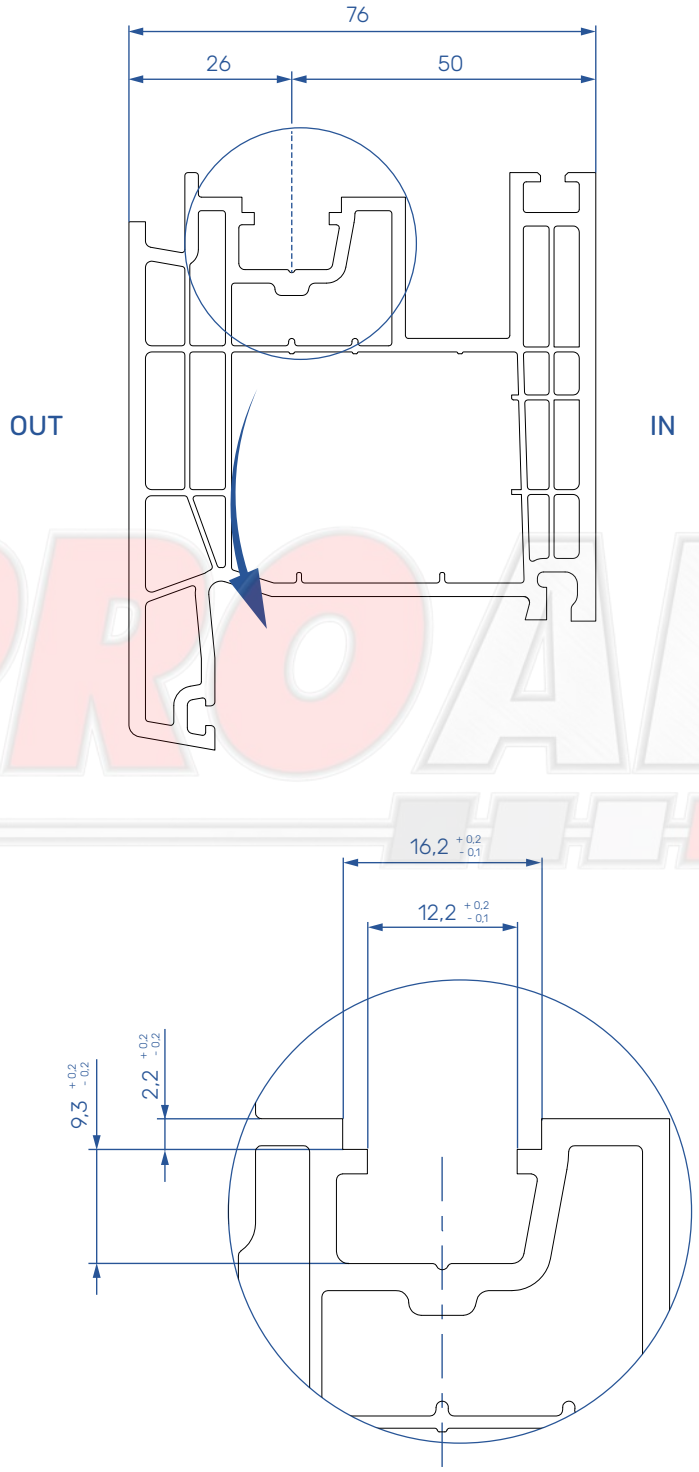

RETRACT & SLIDE - PASS 150 BASIC SCHEME

1 BASIC SET

1143090

2 ESPAGNOLETTE & HOOK STRIKER SET [1]

SRH	HH	POS	MATERIAL
1190-1390	500	L	1143080
1190-1390	500	R	1143081
1391-1585	500	L	1143080
1391-1585	500	R	1143081
1586-1800	500	L	1143080
1586-1800	500	R	1143081
1801-2000	500	L	1143080
1801-2000	500	R	1143081
1690-1890	1000	L	1143082
1690-1890	1000	R	1143083
1891-2090	1000	L	1143082
1891-2090	1000	R	1143083
2091-2300	1000	L	1143082
2091-2300	1000	R	1143083
2301-2500	1000	L	1143082
2301-2500	1000	R	1143083
1690-1890 [2]	1000	L	1143084
1690-1890 [2]	1000	R	1143085
1891-2090 [2]	1000	L	1143084
1891-2090 [2]	1000	R	1143085
2091-2300 [2]	1000	L	1143084
2091-2300 [2]	1000	R	1143085
2301-2500 [2]	1000	L	1143084
2301-2500 [2]	1000	R	1143085

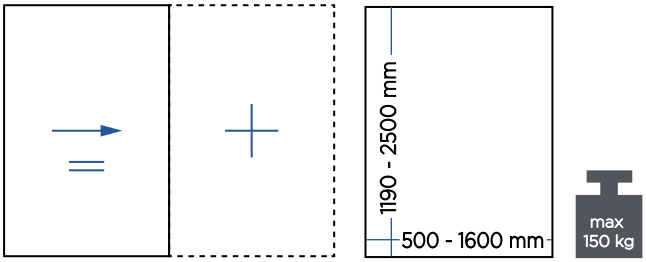

ONLY FOR PROFINE PREMISLIDE PROFILE - BACKSET 40 mm

3 ESPAGNOLETTE EXTENSION

SRH	HH	POS	MATERIAL
1190-1390	500	L	1143086
1190-1390	500	R	1143087
1390-1585	500	L	1143088
1390-1585	500	R	1143089
1586-1800	500	L	1143086
1586-1800	500	R	1143087
1801-2000	500	L	1143088
1801-2000	500	R	1143089
1690-1890	1000	L	1143086
1690-1890	1000	R	1143087
1891-2090	1000	L	1143088
1891-2090	1000	R	1143089
2091-2300	1000	L	1143086
2091-2300	1000	R	1143087
2301-2500	1000	L	1143088
2301-2500	1000	R	1143089

[1] 1x ESPAGNOLETTE + 2x HOOK STRIKER

[2] LOCKABLE VERSION - PROFILE CYLINDER NOT INCLUDED

* MAX. SRW / SRH RATIO = 1 : 2,5

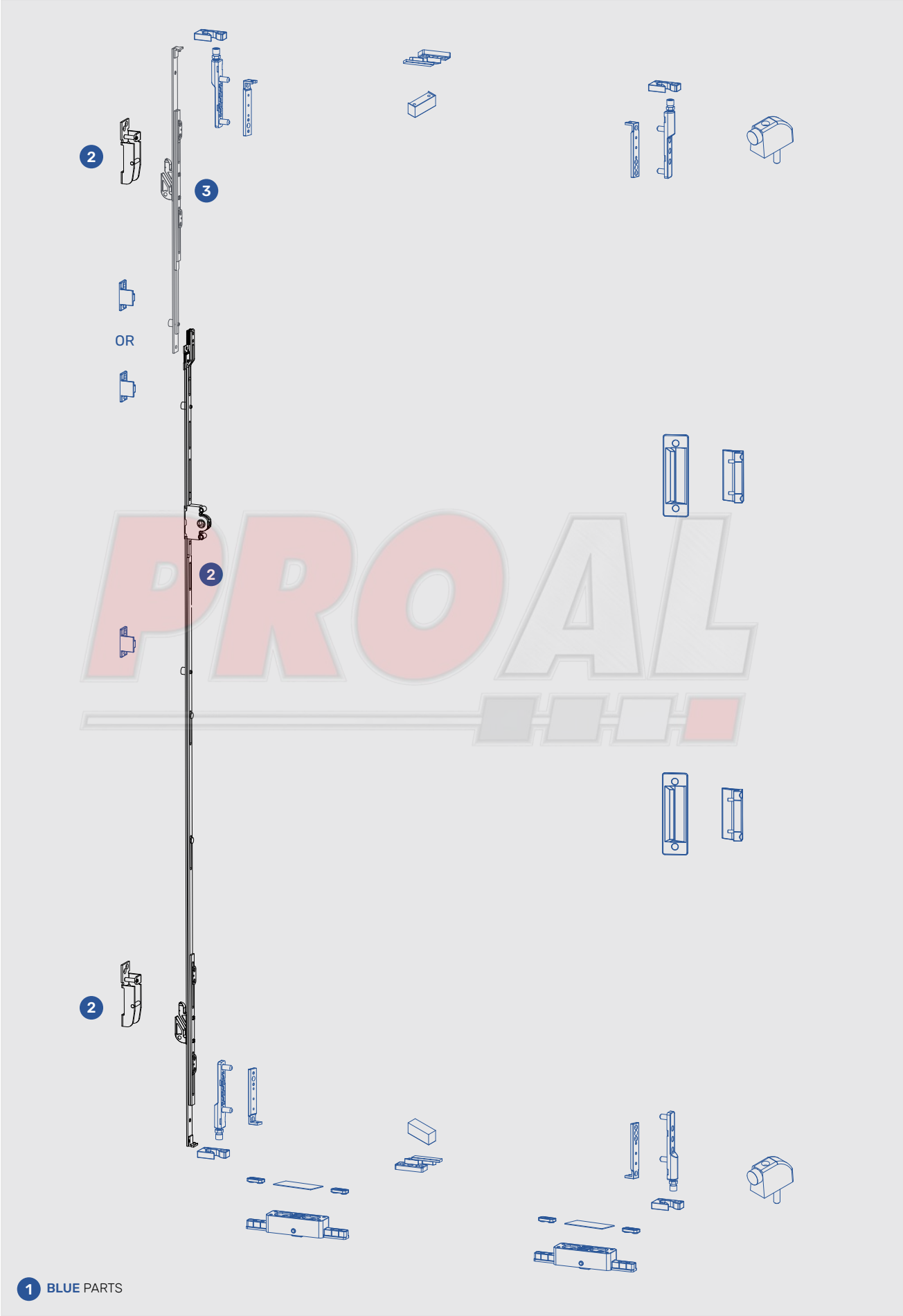
2
3
OR
2
2
1 BLUE PARTS

Espagnolettes and extensions

POS	Description	LENGTH	POS	PACK	MATERIAL
1	ESPAGNOLETTE 770 HH500 BS40 + 2x HOOK STRIKER SET	770	L R	5 5	1143080 1143081
2	ESPAGNOLETTE 1270 HH1000 BS40 + 2x HOOK STRIKER SET	1270	L R	5 5	1143082 1143083
3	ESPAGNOLETTE 1270 HH1000 BS40 WITH LOCK + 2x HOOK STRIKER SET	1270	L R	5 5	1143084 1143085
4	ESPAGNOLETTE EXTENSION 1032	1032	L R	5 5	1143086 1143087
5	ESPAGNOLETTE EXTENSION 1232	1232	L R	5 5	1143088 1143089

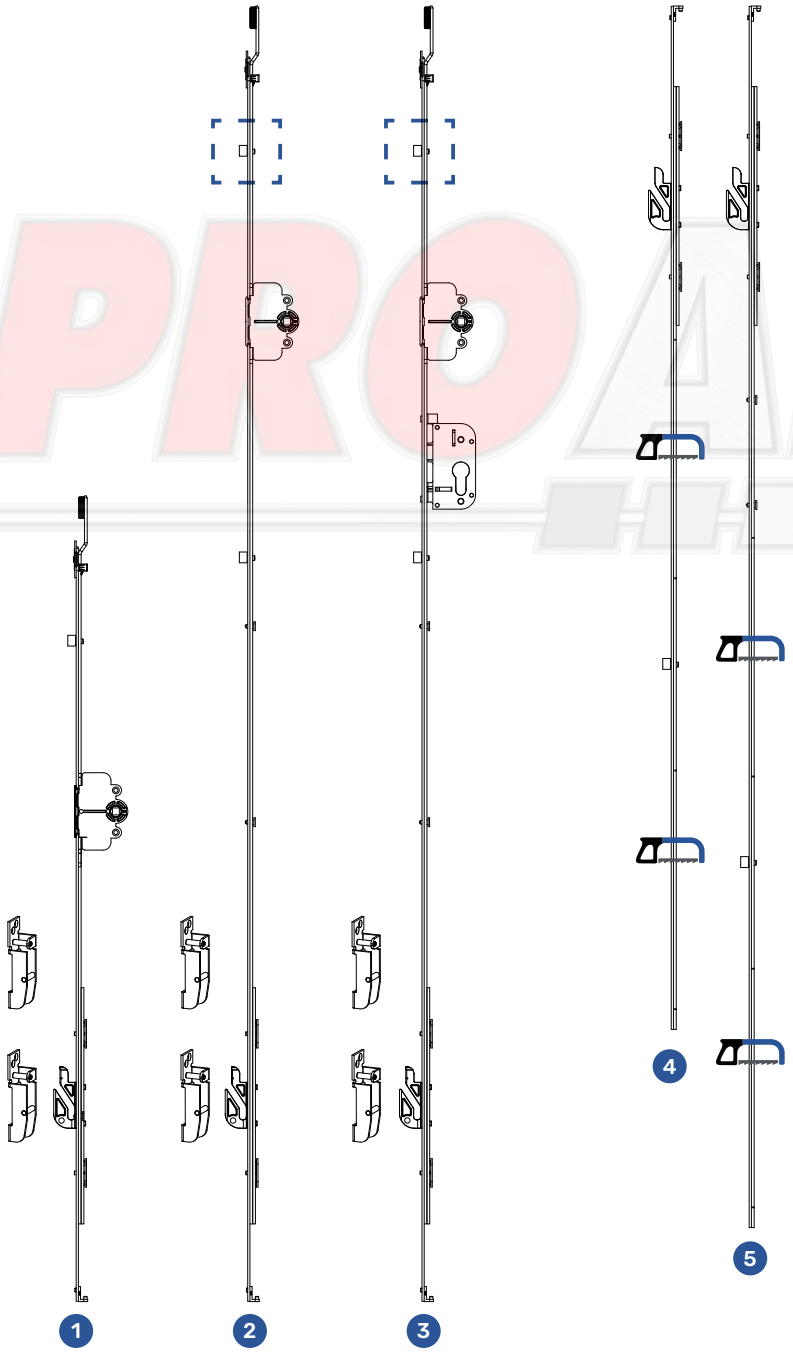

USED ONLY WHEN SRH = 1690 - 2090 mm

Basic set

POS*	Description	PACK IN SET	MATERIAL
1	BOGIE PACKERS - PROFINE PREMISLIDE	2	
2	BOGIES 150 KG	2	
3	R CAM STRIKER	2	
4	CORNER GUIDE STRIKER	4	
5	MIDDLE HORIZONTAL STRIKER - FRAME PART	2	
6	MIDDLE HORIZONTAL STRIKER - SASH PART	2	
7	MIDDLE HORIZONTAL STRIKER - SASH PART PACKER	2	1143090
8	SASH GUIDE	4	
9	CORNER SASH GUIDE WITH SCREWS	4	
10	SASH BUFFER WITH SCREW	2	
11	VERTICAL BACK STRIKER - FRAME PART	2	
12	VERTICAL BACK STRIKER - SASH PART	2	
13	VERTICAL BACK STRIKER - SASH PART PACKER	2	

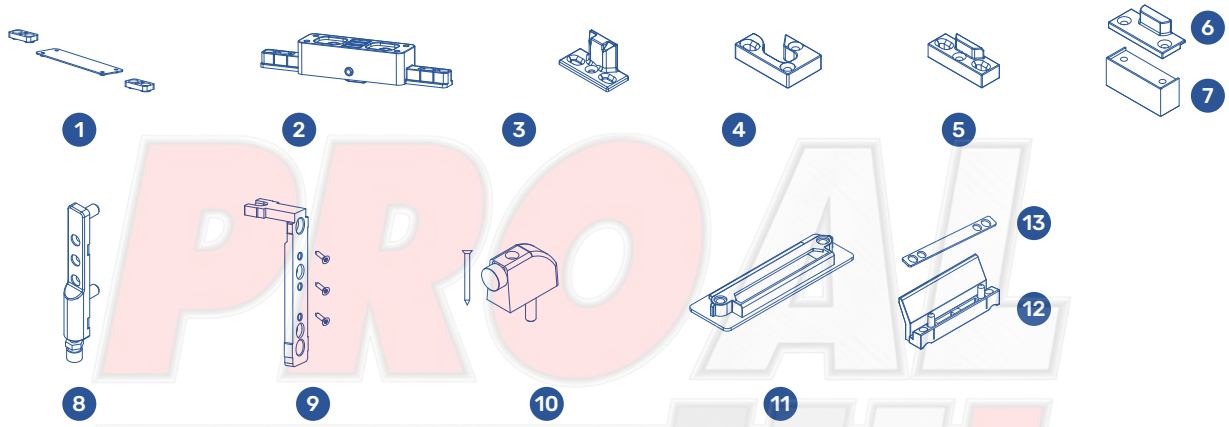

* ALL THE PARTS COMBINED REPRESENT 1 SET

SCREWS FOR FIXING HARDWARE COMPONENTS

TYPE	DESCRIPTION	SIZE	MATERIAL
1	SCREW	4,2 x 25 mm	1134209
2	SCREW	4,2 x 35 mm	1134210

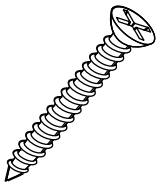

Espagnolette

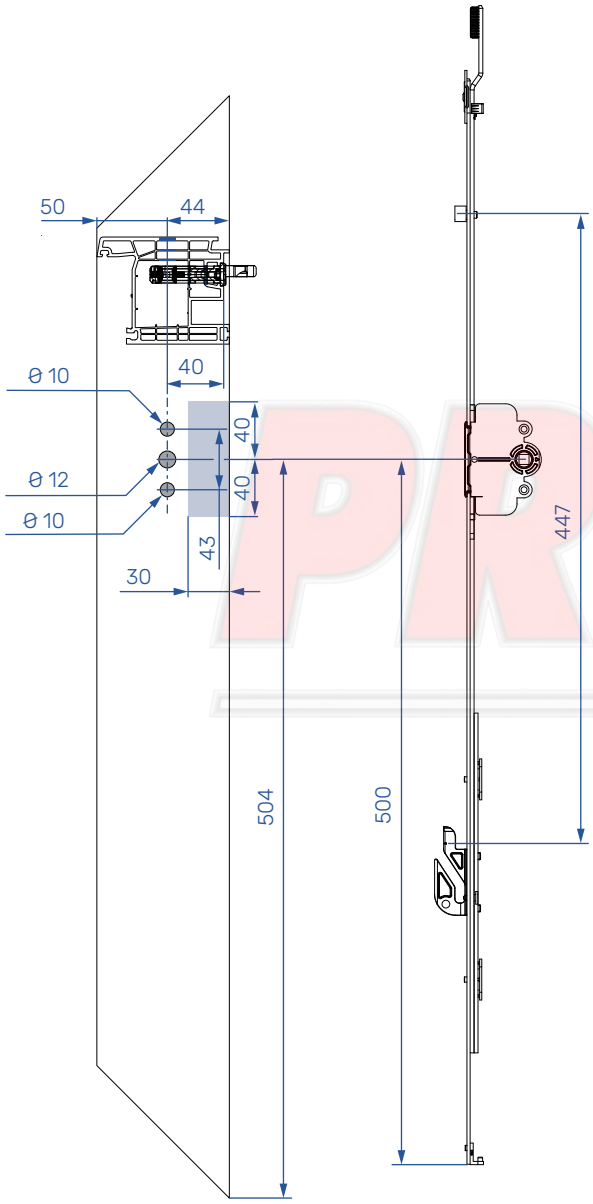

ESPAGNOLETTE 770 HH500 BS40

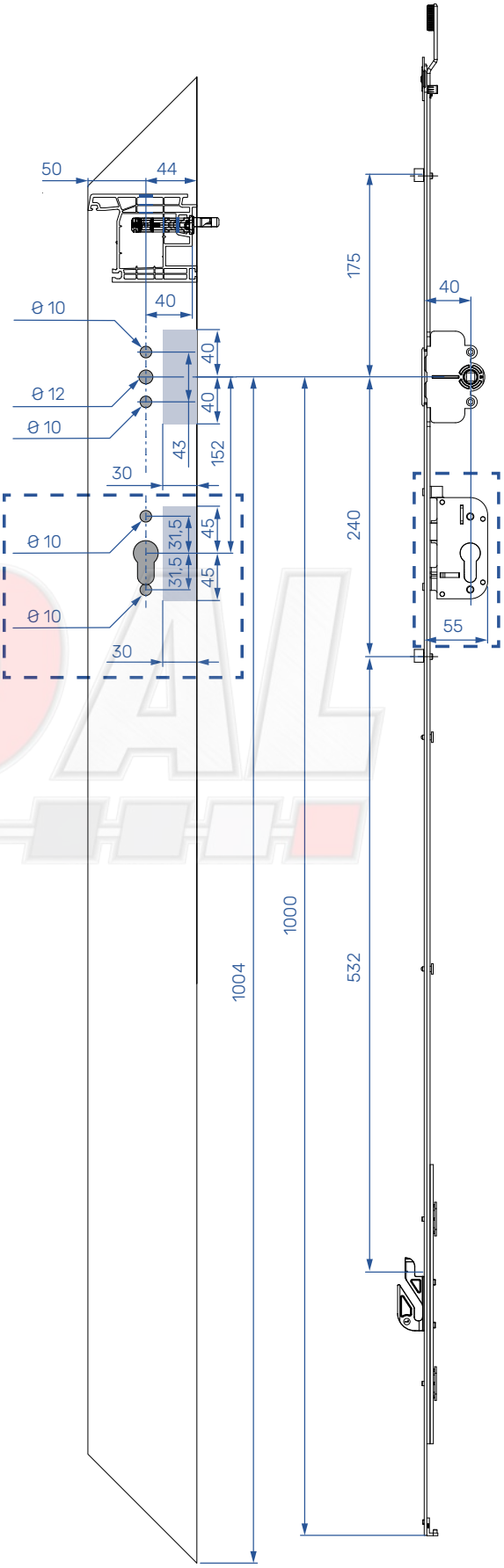

ESPAGNOLETTE 1270 HH1000 BS40

ONLY LOCKABLE VERSION

Vertical back strikers

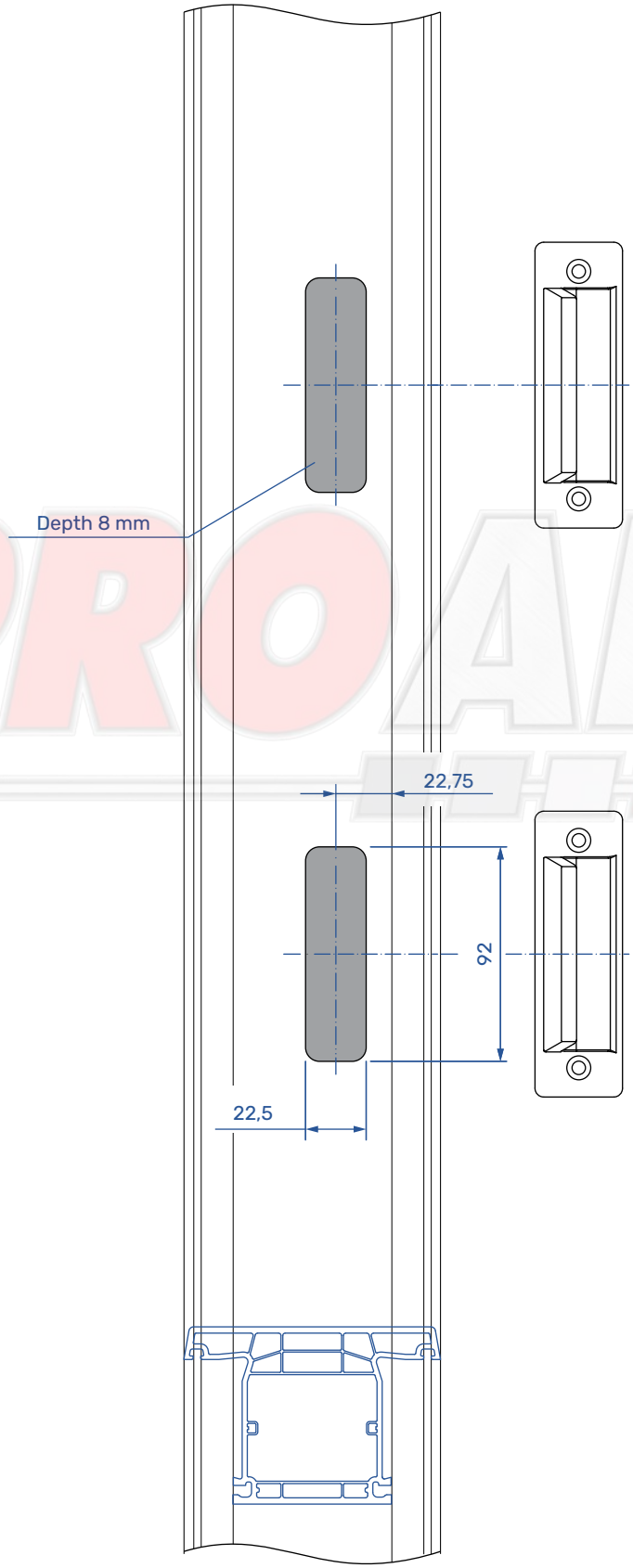

Corner guide strikers

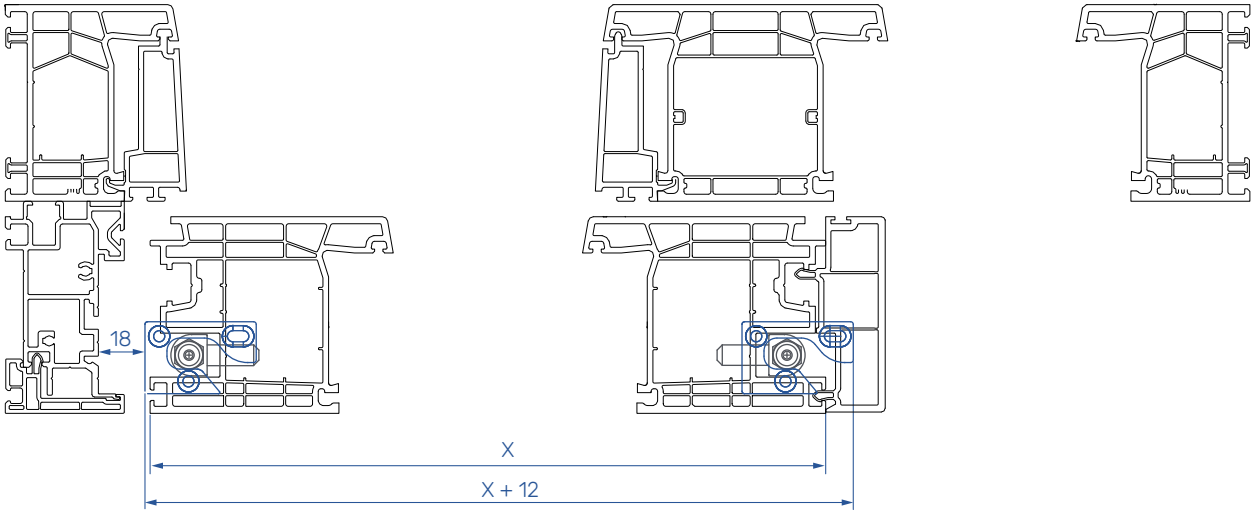

Bogies

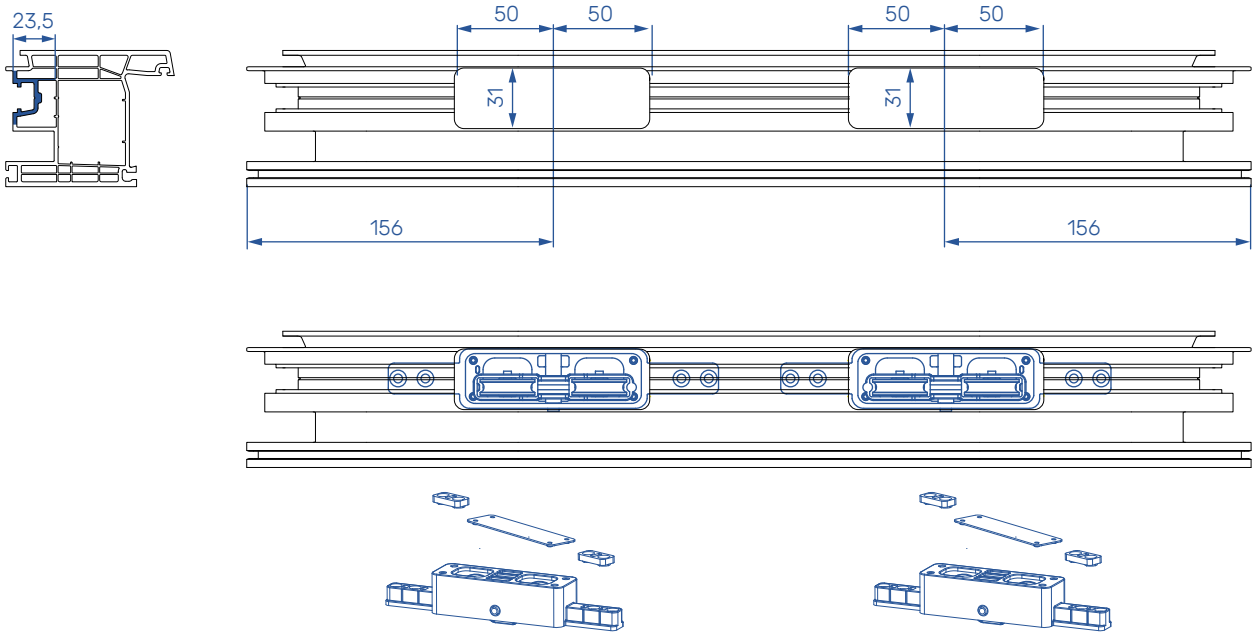

Middle horizontal strikers

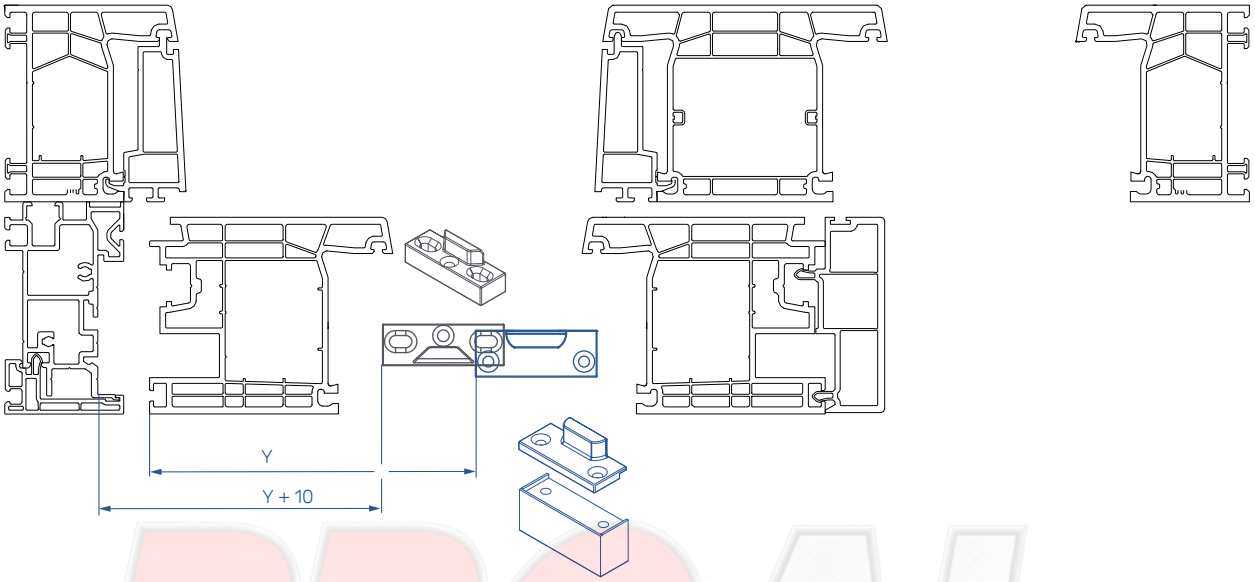

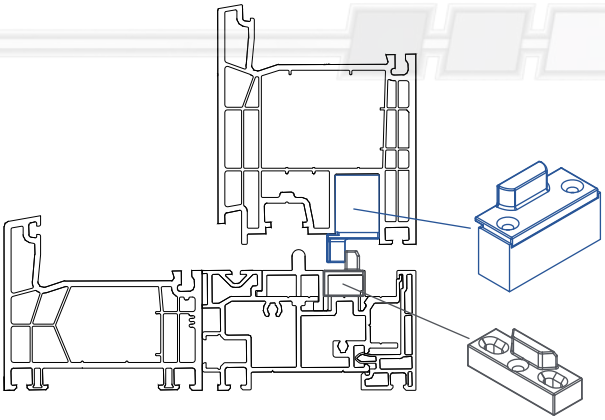

STRIKER POSITIONS

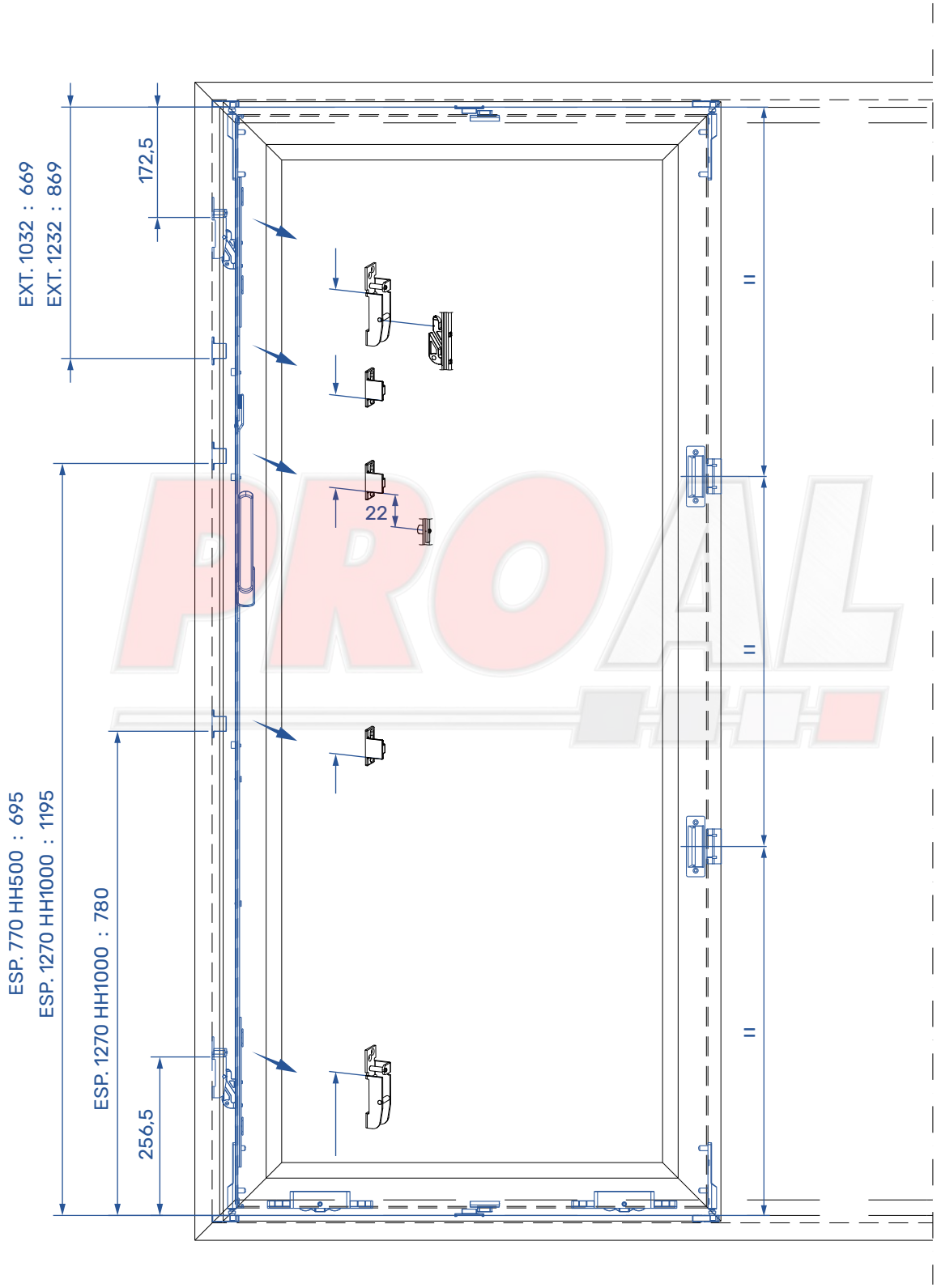

ADJUSTMENT INSTRUCTIONS

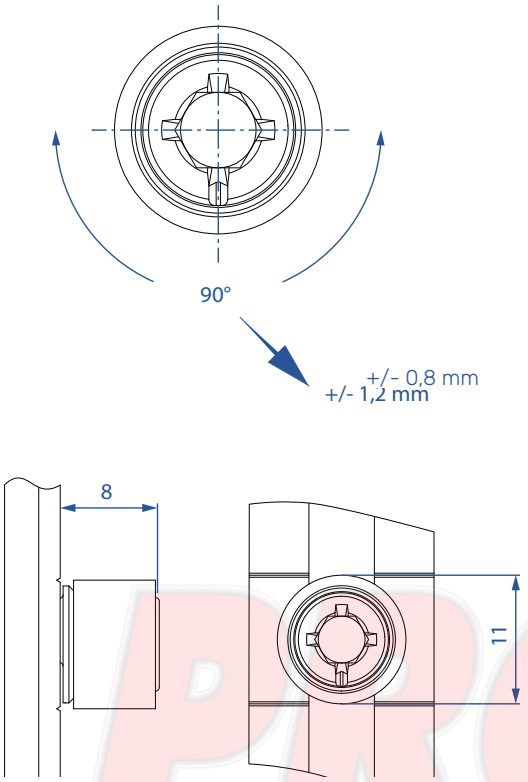

R CAM ADJUSTMENT TOOL

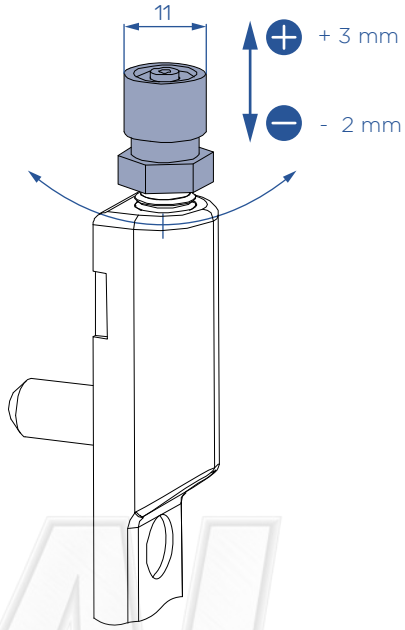

SASH GUIDE PIN ADJUSTMENT TOOL

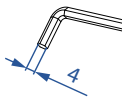

1

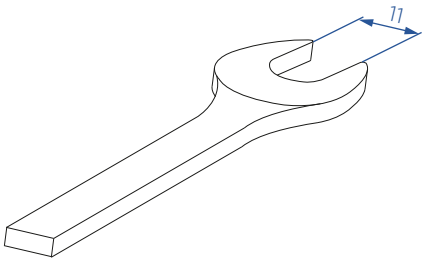

2

TYPE	DESCRIPTION	SIZE	MATERIAL
1	HEX KEY	4 mm	1095750
2	WRENCH KEY	11 mm	/

MAINTENANCE INSTRUCTIONS

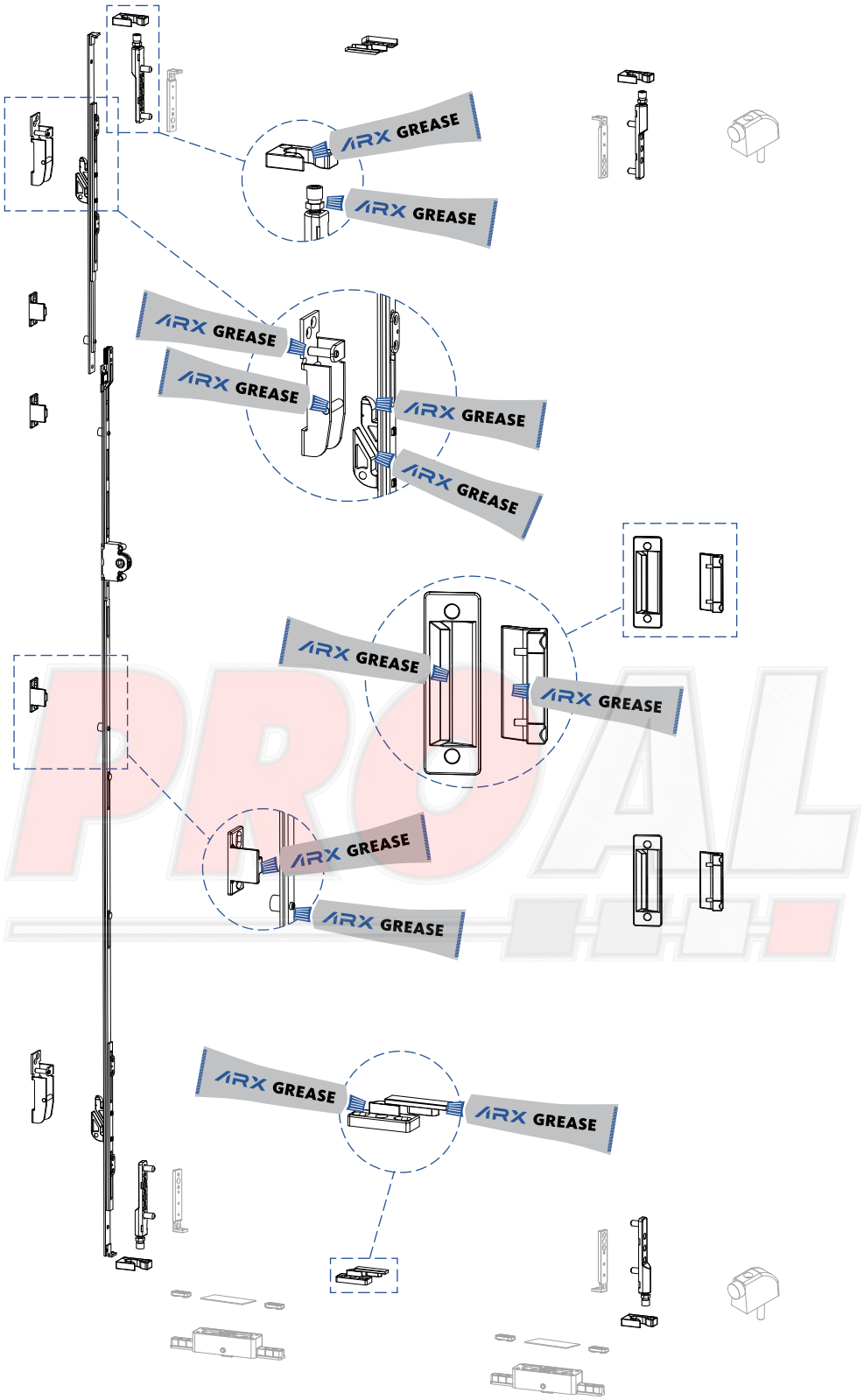

Regular greasing and oiling of operation-relevant components in the sash and frame is recommended at least once a year. In case of frequent use as in schools, hotels the oiling is recommended once in six months.

Acid free and non–resinous grease and/or oil from a specialized dealer must be used.

DESCRIPTION	MATERIAL
ARX - HIGH QUALITY HARDWARE GREASE	1055144

NOTES

ARX building hardware

- INSTALLATION INSTRUCTIONS,
- INSTRUCTIONS FOR USE,
- PRODUCT PORTFOLIO PRESENTATION,
- NOVELTIES.

PROAL

info@arx-hardware.com
+ 386 (0)1 70 95 100

ARX
The Hardware.

Kovinoplastika Lož d.o.o.
Cesta 19. oktobra 57, Lož
1386 Stari trg pri Ložu
Slovenia

Follow us: